ANGLE HEADS

Tooling technology

Metal machining

BENZ TOOLING



BENZ
TOOLING

At BENZ Tooling our maxim „Innovation. Precision. Passion.“ is far more than just a marketing formula. Rather, it describes the core goals of our business while also outlining the reasons why we have been able to compete in the market successfully with tool systems for metal machining, woodworking and composite material processing for more than 75 years.

Innovations are important to us. But we also recognize that they can be successful only if they precisely meet the needs of our customers. This is why we have maintained a strict focus on our customers for many years. We ensure that our developments and innovations simplify your production processes and lower your manufacturing costs – and ultimately improve your competitiveness as a result.

INNOVATION. With an eye on what is currently within the bounds of feasibility, we strive to always make use of innovative technologies. And we keep in close contact with our customers to ensure we already know today what our customers will need tomorrow. Technical progress is ingrained into our very identity, which means you can always find smart, detailed solutions in our product range.

PRECISION. We ensure our products have the highest level of precision and reliability. This is vital in our industry. Our customers also rely on absolute precision during production – and need to be able to put all their trust in us. But production is not the only area where we strive for precision. We also seek minimal tolerances and maximum accuracy in other areas as well – from development to sales to delivery.

PASSION. BENZ precision products are composed of a vast array of different individual parts. They are the result of great care that starts in the design phase and even includes the selection of raw materials. Primarily, however, they are the expression of our employee‘s experience and passion to do good work. We are tool specialists through and through and we are willing to move mountains to reach the perfect solution and to ensure the satisfaction of our customers.

CONTENT

GENERAL

04 BENZ TOOLING YOUR PARTNER – COMPLETE MACHINING FOR ALL SECTORS
07 BENZ ANGLE HEADS – ADDED VALUE FOR YOUR MACHINE
10 UNLIMITED POSSIBILITIES
12 BENZ SELECT LINE
14 CUSTOMIZABLE PRODUCTS
16 UNIQUE SOLUTIONS

BENZ FEATURES AND OPTIONS

20 ANGLE HEADS – SYSTEM DESIGN
22 BENZ MODULAR QUICK CHANGE SYSTEMS – BENZ SOLIDFIX® & BENZ CAPTO™
24 PERFECTLY FIT – SECURED & STABLE
26 EQUIPMENT VERSIONS – COOLING
28 GEARBOX – LIFETIME LUBRICATION
30 BENZ I.TAG – DIGITAL NAMEPLATE

BENZ SELECT LINE: PREDEFINED STANDARD ANGLE HEADS

34 BENZ SELECT LINE – PRODUCT OVERVIEW
36 MONO WSX
38 FORTE WWX
40 FORTE WWX (EC+IC)

CUSTOMIZABLE PRODUCTS: ADAPTABLE ANGLE HEADS

44 BENZ ANGLE HEADS – PRODUCT OVERVIEW
46 MONO WSX
54 DUO WZX
62 FORTE WWX (EC/IC)
72 SLIM WGX
78 SLIM WGX-S
88 FLEX WDX
94 FIX WFX

UNIQUE SOLUTIONS: CUSTOM-MADE ANGLE HEADS

98 ELECTRIC MOBILITY: DRIVING THE FUTURE
100 AUTOMOTIVE: TECHNICAL SOLUTIONS AT THE HIGHEST LEVEL
102 BRAKE CALIPERS: MACHINING IN SMALLEST SPACES
104 SOARING FLIGHTS IN AEROSPACE TECHNOLOGY
106 WIND POWER FOR ENVIRONMENTAL CONTRIBUTION

INFORMATION

108 BENZ SERVICES FOR YOUR BENEFIT
112 PICTOGRAMS AND ABBREVIATIONS



BENZ TOOLING – YOUR PARTNER
COMPLETE MACHINING FOR ALL SECTORS

Angle heads for your application – from standard to custom-made solutions

Do you have an application where an angle head is suitable for machining a workpiece? Then you are right to come to BENZ Tooling. Because our goal is to optimize your production sequence.

As a partner working with CNC machining, we have many years of experience in manufacturing units for machining centers. We know what we are talking about. And we implement what we say.

This is reflected in our products, featuring high performance, machining precision and quality.

BENZ angle heads help you with the economical complete machining of your workpieces by minimizing the number of tool set-ups and the machining time, thus reducing your production costs.

Besides an extensive standard program, we also offer unique, custom-made solutions. In close cooperation with you as a customer we develop the individual answer to your needs . We maintain close contact with machinery manufacturers and therefore have the necessary know-how to develop the exceptional. Challenge us!


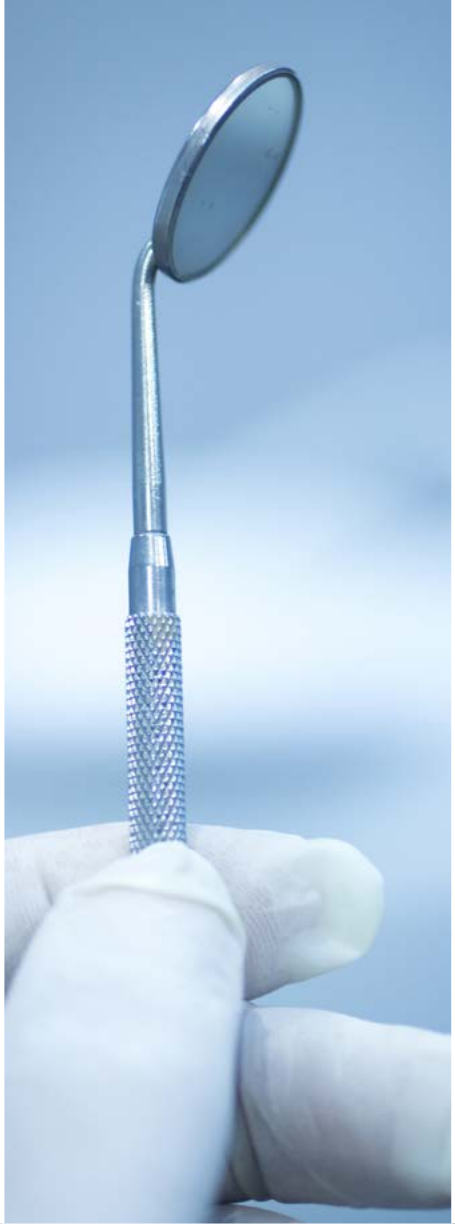



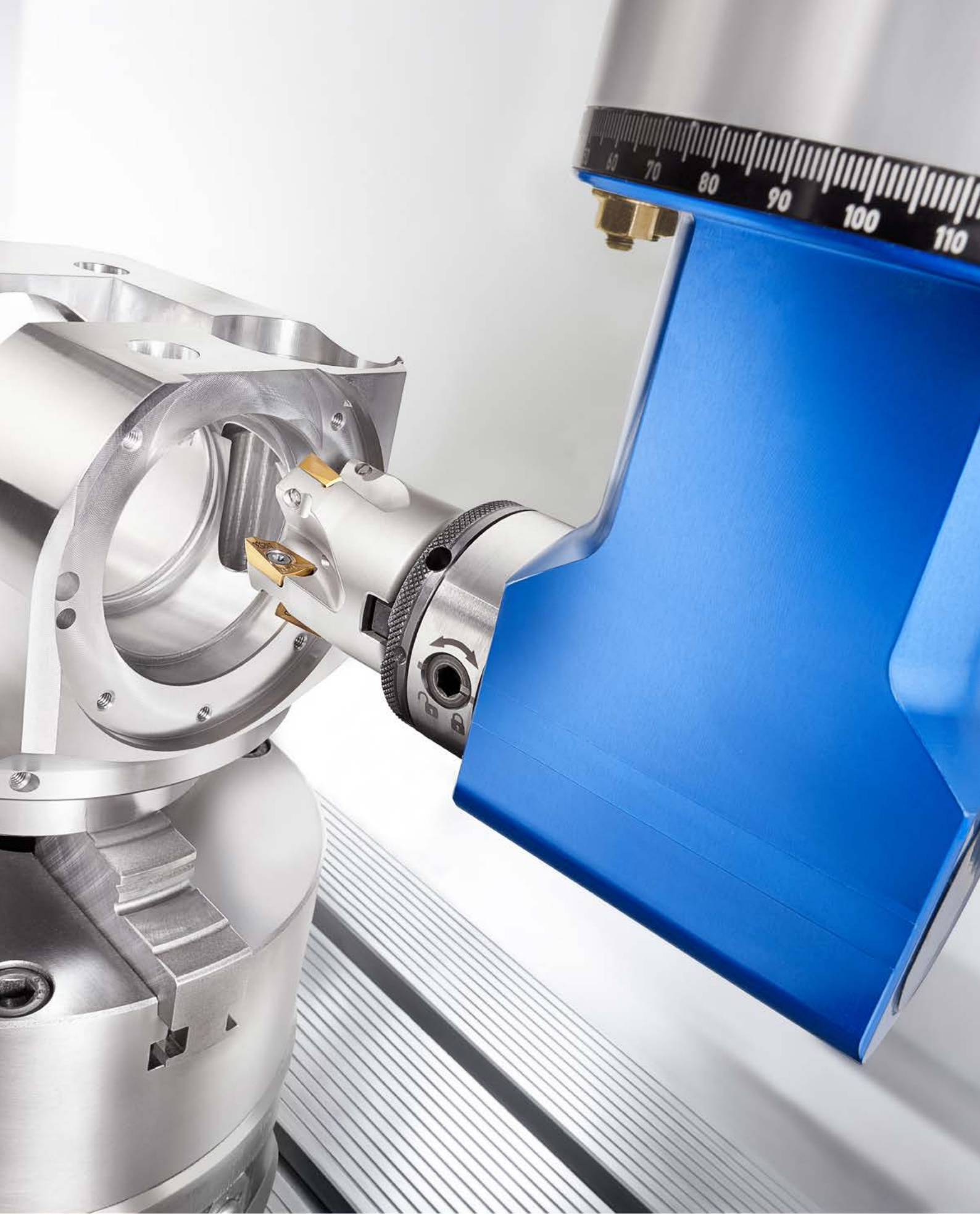
60
70
80
90
100
110

BENZ ANGLE HEADS
ADDED VALUE FOR YOUR MACHINE

Angle heads are additional modules that extend the functional scope of your machine tool. They are used in the machining process mainly for cyclical applications.

A machining step is usually followed by a rest period for the unit. The machining of the workpiece is then continued with a newly inserted tool.
All BENZ standard units are specially designed for this.

YOUR ADVANTAGES

Reduction of machining time / production costs
BENZ angle heads enable the complete machining of complex workpieces on a machine.

Optimally designed for the machining task
BENZ angle heads are perfectly matched by our specialists to your individual requirements. We have a suitable solution for every challenge!

Machining of hard-to-reach areas
Even locations on workpieces that are difficult to access or were previously inaccessible can be machined with angle heads.

High torque transmission / fewer wear parts
The transmission of high torques and fewer wear parts are realised by using angular gears made up of a crown wheel and spur wheel.

Simplification of the machining procedure
Elaborate and complicated machining procedures can be simplified considerably by using BENZ angle heads.

Compact, modular design
BENZ angle heads have an extremely compact design and consist of components including the output spindle (tool holding/clamping system), angle head, torque arm and taper. Together we prepare the angle head suitable for your work task.

Usable in all common machine concepts
BENZ angle heads are designed for use in all common machining centres with automatic or manual tool change.

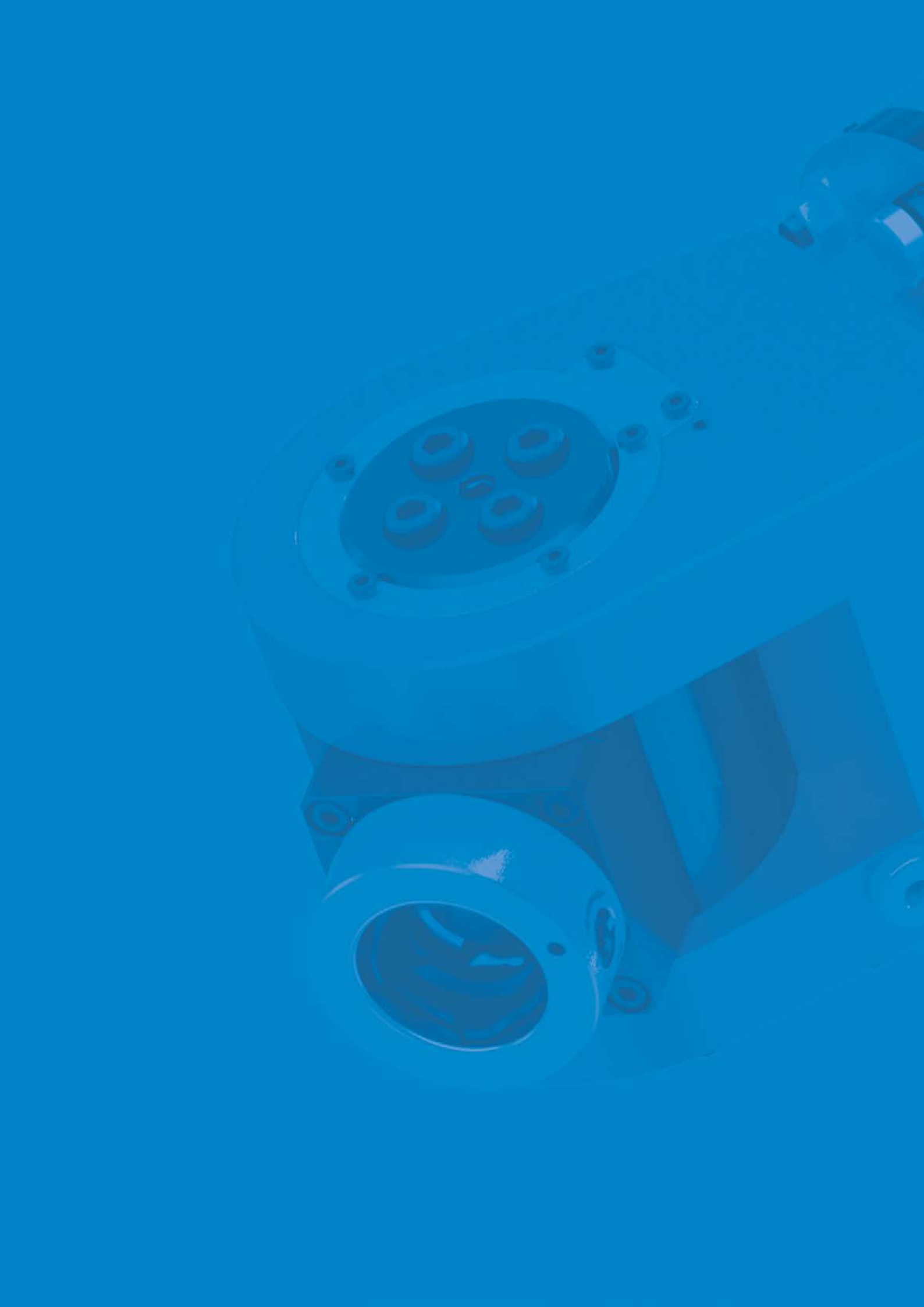

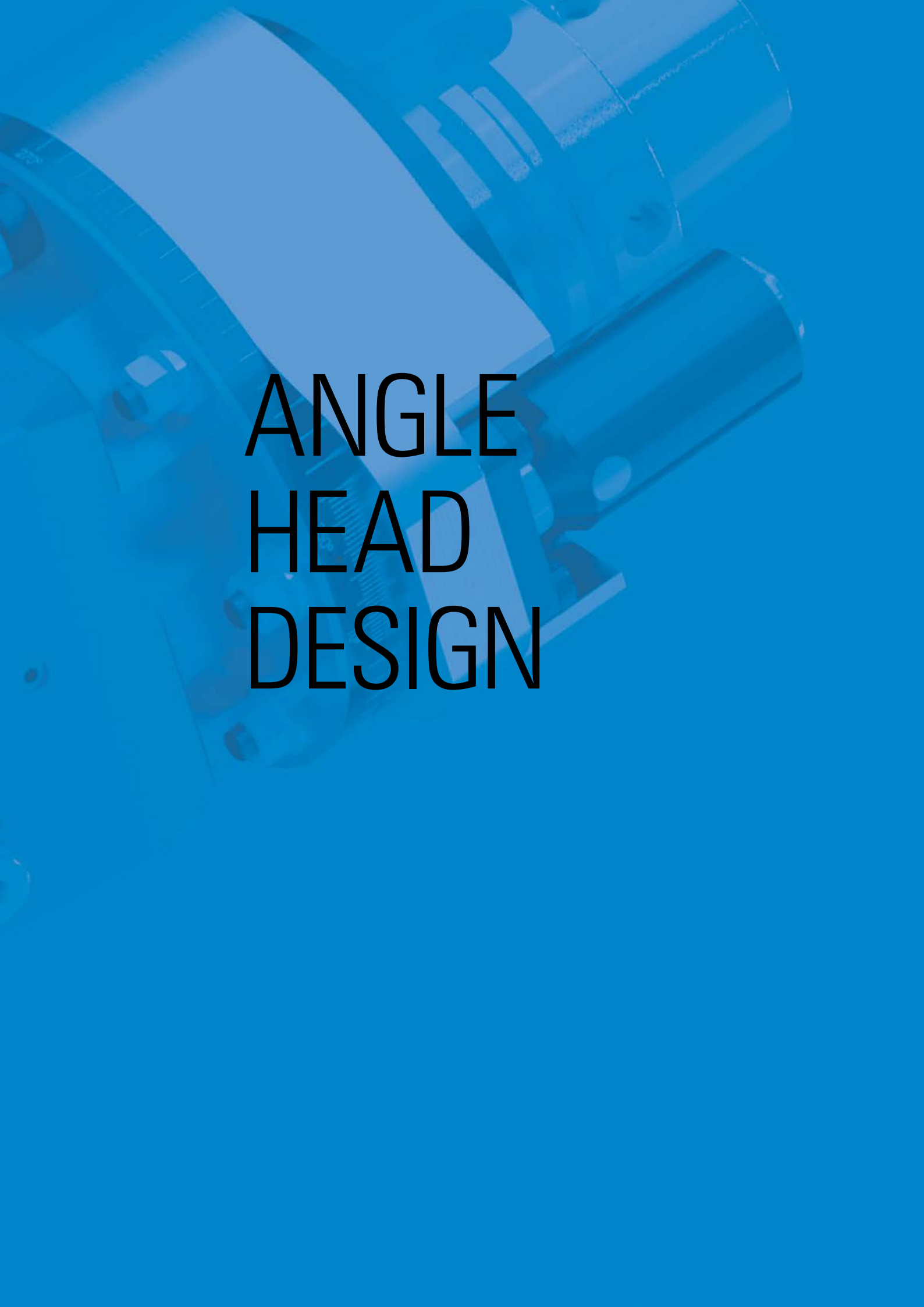

ANGLE HEAD DESIGN





BENZ ANGLE HEADS
UNLIMITED POSSIBILITIES

BENZ SELECT LINE
PREDEFINED STANDARD

Most popular angle head configurations
Page 12

CUSTOMIZABLE PRODUCTS
ADAPTABLE

Adaptable standard angle heads
Page 14





UNIQUE SOLUTIONS

CUSTOM-MADE

Individual products for your needs
Page 16

BENZ SELECT LINE
PREDFINED ANGLE HEADS

Quick delivery, attractive pricing and BENZ Solidfix®

Our most popular angle heads MONO WSX and FORTE WWX are available in the BENZ Select Line program.

BENZ Select Line products are equipped with our quick-change system BENZ Solidfix®.

Your benefits: even more flexibility and further cost savings – all in the well-known BENZ quality.

BENZ Select Line products are available as BLP version (BENZ locking pin) and TLP version (tapered locking pin).

Including adapter and stop block



BENZ SELECT LINE
ANGLE HEADS

BLP EDITION



TLP EDITION



CUSTOMIZABLE PRODUCTS
ADAPTABLE ANGLE HEADS

“Plug & Play” with customized standard

Would you like to purchase an angle head and start machining immediately? With the modular component system from BENZ Tooling, this is no longer a challenge.

Using standard components a wide selection of front heads in various sizes and for the most common output spindles allows you to configure the angle head you need for your machining operation.

To ensure that the angle head fits your machine perfectly, we create a customized torque arm – in close cooperation with the machine manufacturer.

Thanks to years of experience and in line with the motto “as much standard as possible, as much customization as needed”, we make sure that you don‘t lose time during assembly and can start processing straight away.



DESIGN TYPES

The combination of the machine, the cutting tools used and your workpiece determine which product design is the best for you.

BENZ angle heads are available in various sizes with different parameters. The choice is yours!

See all variations on page 44.







UNIQUE SOLUTIONS
CUSTOM-MADE ANGLE HEADS

We love the challenge and the exceptional

Do you need an angle head that does not match the standard parameters? No problem!

Custom-made products and highly complex new developments are our strength – prompt, affordable and always in the well-known BENZ quality.

Extreme conditions anywhere in the world: our tried and tested components and systems provide you with limitless possibilities.

We develop and produce your angle head made to measure for

- your specific working piece
- your specific machine
- your specific working conditions

See already realized custom-made solutions from page 97.

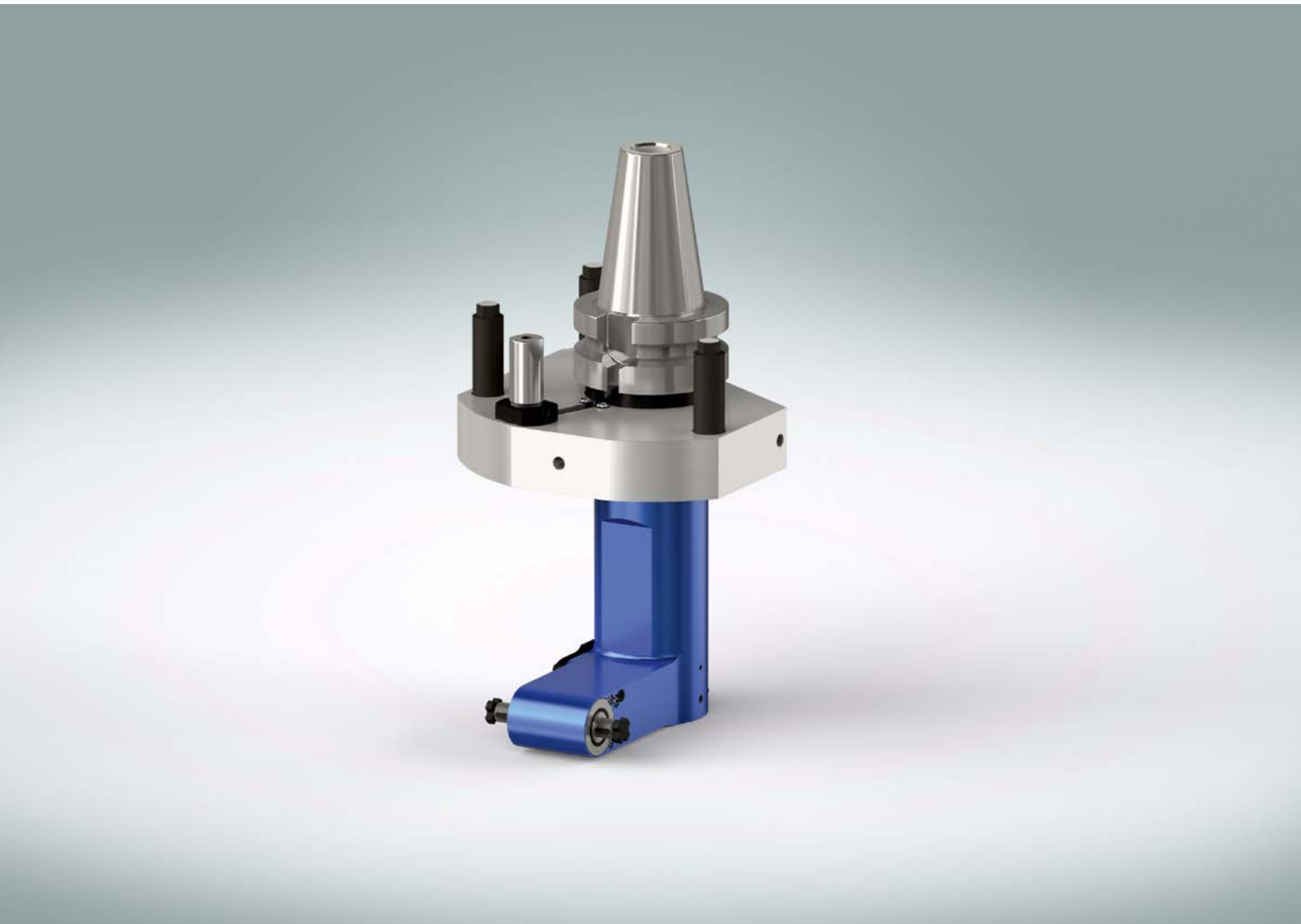

What can we do for you?

YOUR DIRECT LINE
YOUR CONTACTS WORLDWIDE

1 We define the best possible solution and develop an appropriate concept based on your requirements.

2 Your contact partner starts implementation after coordinating the solution proposal.

3 Your angle head is a high quality piece of work and is produced and assembled at the BENZ factory by experienced employees.

4 Your angle head is subjected to various performance tests before it leaves our factory.



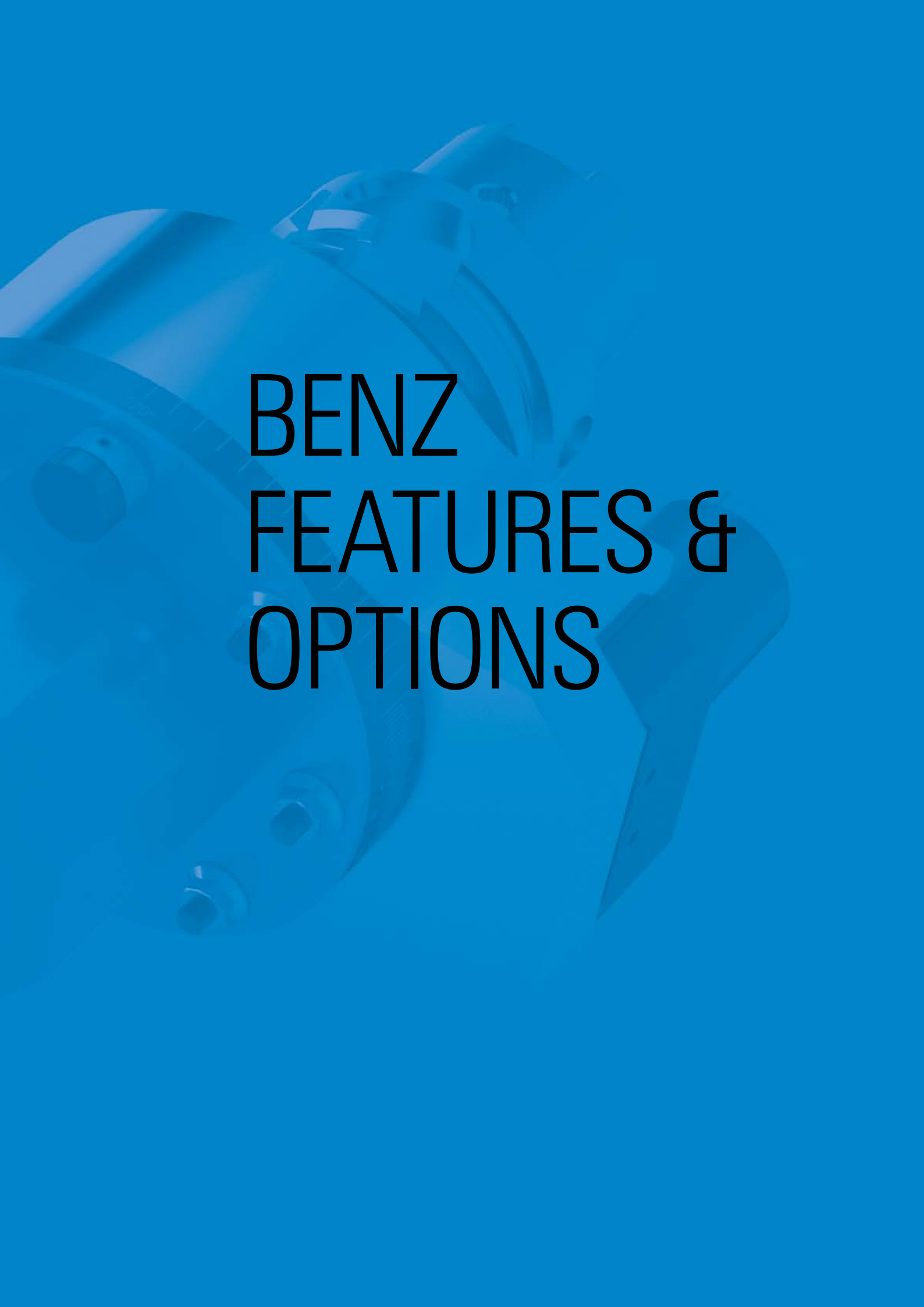

BENZ FEATURES & OPTIONS

ANGLE HEADS
SYSTEM DESIGN

GENERAL SYSTEM DESIGN

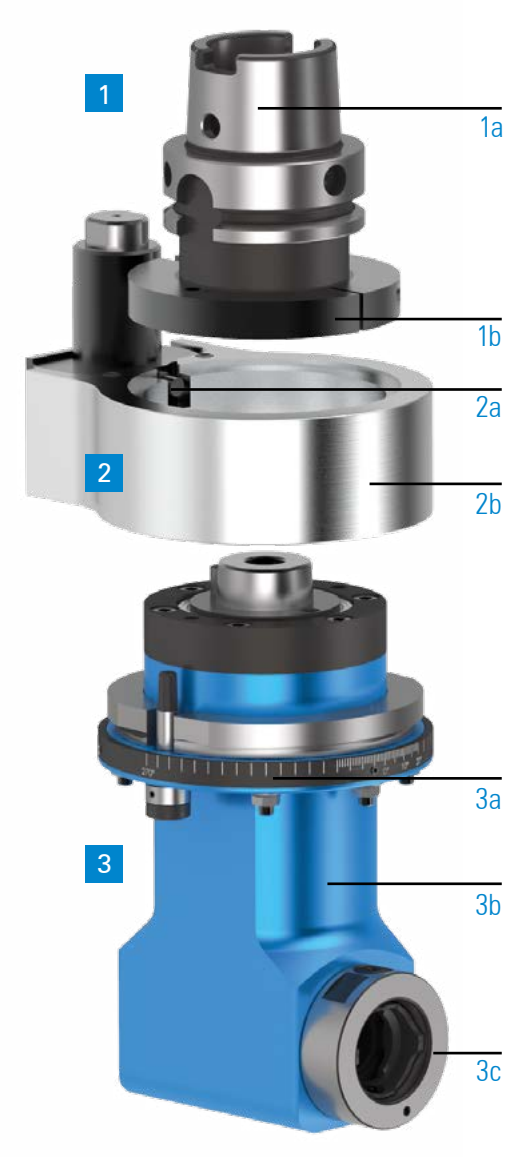

1 Drive

1a Taper

- holds angle head in machine
- all common tapers available: see p. 21

1b Locking disc

- ensures the exact angle setting of the taper in relation to torque arm, locking sleeve and locking pin

2 Torque arm

2a Locking pin

- lock of taper and locking disc
- prevents turning of drive and enables precise depositing in tool magazine
- the stop block unlocks the angle head

2b Torque arm

- secures angle head against turning during machining by fixing it to the machine spindle
- standard torque arm (e.g. BENZ Select Line p. 34)
- customized torque arm adapted to the machine model of the customer

3 Front head

3a Scale ring (360°)

- manual, stepless turning of angle head at a desired working angle
- fixing using clamping screws

3b Housing

- different types, sizes and designs available for delivery according to application: see p. 44

3c Output spindle

- holds the cutting tool
- all common output spindles possible: see p. 21
- discover the BENZ modular quick-change systems for an optimal solution

COMPONENT VARIANTS

Front head – Design / Size

design and size are matched with respective machining case

Design



Sizes

04 **05** **07** **15** **20**

Output spindle

all common output spindles can be realized

BENZ Standard


BENZ Solidfix®


BENZ CAPTO™


Collet chuck


Weldon


Whistle Notch


Milling arbor


HSK


KM™

Torque arm

primarily a machine-related design alternative: BENZ standard torque arm or even customized





Taper

all common tapers can be realized


HSK DIN 69893


SK DIN 69871


MAS BT


CAT


Coromant Capto®


KM™

OPTIONAL: EQUIPMENT VERSIONS

Stop block



page 24

Additional support



page 25

Coolant supply



page 26

BENZ i.TAG



page 30

i Individual customer requirements, e.g. tapers, output spindles, etc. not listed here, can be realised on request. Please contact us!

BENZ MODULAR QUICK CHANGE SYSTEMS
BENZ SOLIDFIX® | BENZ CAPTO™

An investment worth making

Beside higher rpms and higher accuracy the reduction of set up and machine down times is the main focus in the manufacturing industry. An important success factor is the integration of a modular tool interface.
The basic principle and the biggest advantage of modular tooling systems is that tools can be pre-set, set up and be ready for use on the machine by the operator, all while he is already in the process of machining other parts. The pre-set adapters then can be changed in a flash in the machine.

You as the customer increase the valuable production time of your machine while at the same time saving costs: Due to the modular design only the adapters are being changed – the base tool holder stays in the machine. This reduces the necessity of buying additional tools to a minimum.

With BENZ Solidfix® and BENZ CAPTO™ you have two of the most advanced and sophisticated modular quick change sytems available to you.

BENZ SOLIDFIX®



BENZ CAPTO™



PERFORMANCE. PRECISION. HANDLING. SAFETY.

Minimises setup and non-productive time / increases productivity
by changing the preset tool within seconds

Low investment overhead,
because the angle head remains on the machine and only an adapter needs to be changed, fewer angle heads are needed overall

Easy handling
One-hand operation without a special tool

Operating safety
Cannot become detached accidentally

SAVINGS WITH BENZ QUICK CHANGE SYSTEMS

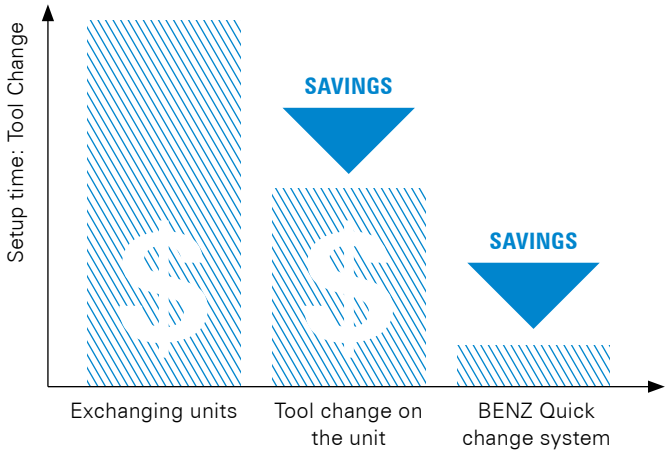

Reduce setup time = Save costs

Long machine standstill times arise for a tool change where the complete unit is taken out of the machine. By changing the cutting tool directly on the unit, setup times can already be reduced by 40%.

The optimum can be achieved with modular quick-change systems. Here the cutting tool is measured outside of the machine in the presetting device. Replacing the adapter therefore only requires a few seconds. You save 90% of your original setup costs! You also reduce your reject rate as the first part is already a good part.

OUTPUT SPINDLES ACCESSORIES

Please see our catalog for detailed information on our modular quick change system as well as all accessories

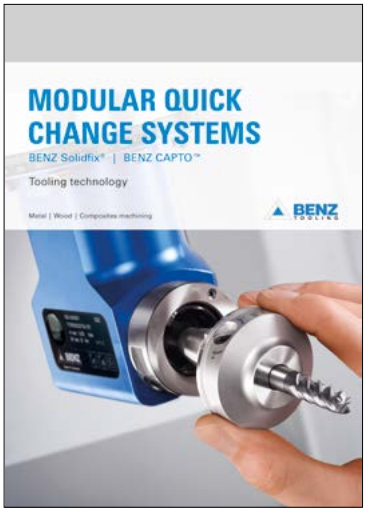

- adapters BENZ Solidfix®
- adapters BENZ CAPTO™
- accessories for collet chucks
- wrenches
- miscellaneous

DOWNLOAD CATALOG

PERFECTLY FIT
SECURED AND STABLE

BENZ STOP BLOCK

Lock and unlock block

BENZ stop block mounted on the machine spindle secures your unit against rotation during machining, enables fast positioning via the torque arm and guarantees high positioning accuracy during manual or automatic tool change.

The design is standardised according to ISO 9524.

BENZ stop blocks can be adjusted to the machine by the user. In this case, the hole pattern is provided by the user. For this purpose, please observe our latest angle head operating instructions.

We will be happy to help you with the adjustment of the stop block. Please contact us.

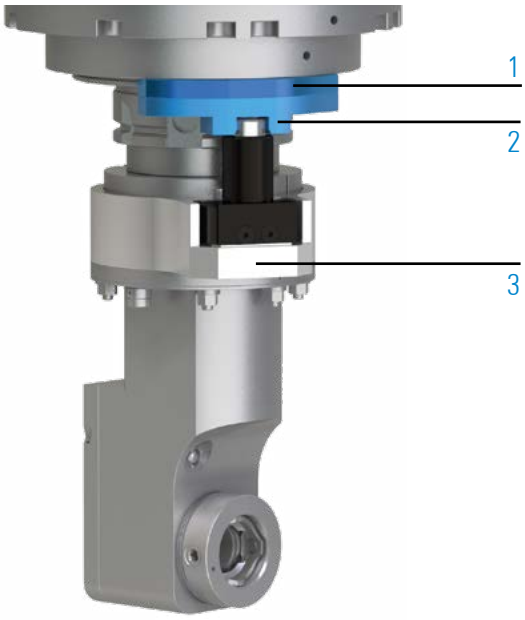

1 **Spacer block**

- regulates the distance between stop block and machine
- matched to the specific machine

2 **Stop block**

- locks or unlocks the angle head at the machine spindle
- the slot at the stop block holds the locking bolt of the torque arm

3 **Torque arm**

- increases the rigidity between angle head and machine spindle
- usually adapted to the respective machine
- alternative: BENZ standard torque arm

BLP EDITION



TLP EDITION



Technical data for BENZ stop block see in section BENZ Select Line from page 36

HOW TO INSTALL

ADDITIONAL SUPPORT

Support for optimal machining results

An additional support increases the stiffness between the machine spindle and the unit. It ensures optimum force transmission from the machine spindle to the tool.

The vibrations that occur during machining are reduced. This leads to better workpiece quality and a longer service life of the aggregate.

Versions



torque arm

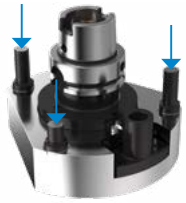

torque arm
with 3-point support

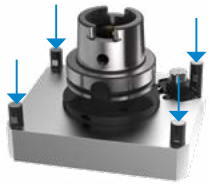

torque arm
with 4-point support



mechanical/hydraulic
additional support

The need for an additional support depends on the respective machining case.
Please contact us. We will be happy to advise you.

EQUIPMENT VERSIONS
COOLING

Several types and methods of tool cooling

Cooling the cutting edge and the coolant itself have a significant impact on the quality of the workpiece, the life of your cutting tool and therefore on your costs. Depending on the machine load and specifications, we offer following cooling options.

Water coolant: max. 100 bar

MQL: max. 8 bar

WATER COOLING

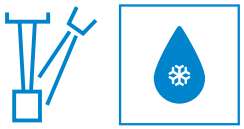

Coolant supply from the machine

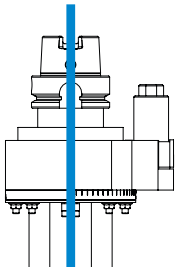

via spindle

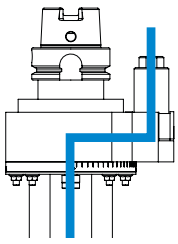

via stop block / torque arm

Coolant supply to the cutting edge

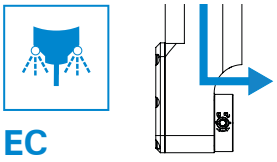

EC

external cooling

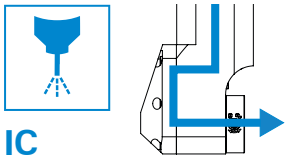

IC

internal cooling

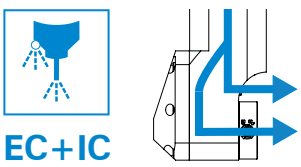

EC+IC

external / internal cooling

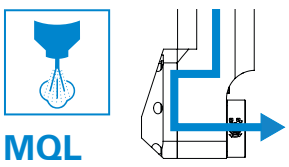

MQL

internal cooling

MQL – MINIMUM QUANTITY LUBRICATION

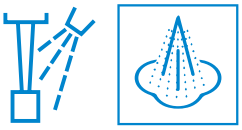

Less lubricants – great benefits

Reducing lubricant consumption not only cuts costs, moreover, it protects the environment and improves working conditions.

By reducing residues, MQL also helps to extend the service life of tools and eases cleaning and disposal.

Essentially, minimum quantity lubrication offers an efficient and sustainable lubrication solution.

BENZ angle heads can be equipped with MQL on request.

BENZ MQL technology – optimal MQL flow

BENZ Tooling designed angle heads especially for MQL to always provide the right MQL quantity to the cutting tool.

By using a special, separate curved pipe (without corners and edges) the MQL is directly transported into the cutting tool.

Without baggings and undesired droplet formation this ensures an optimal MQL flow.

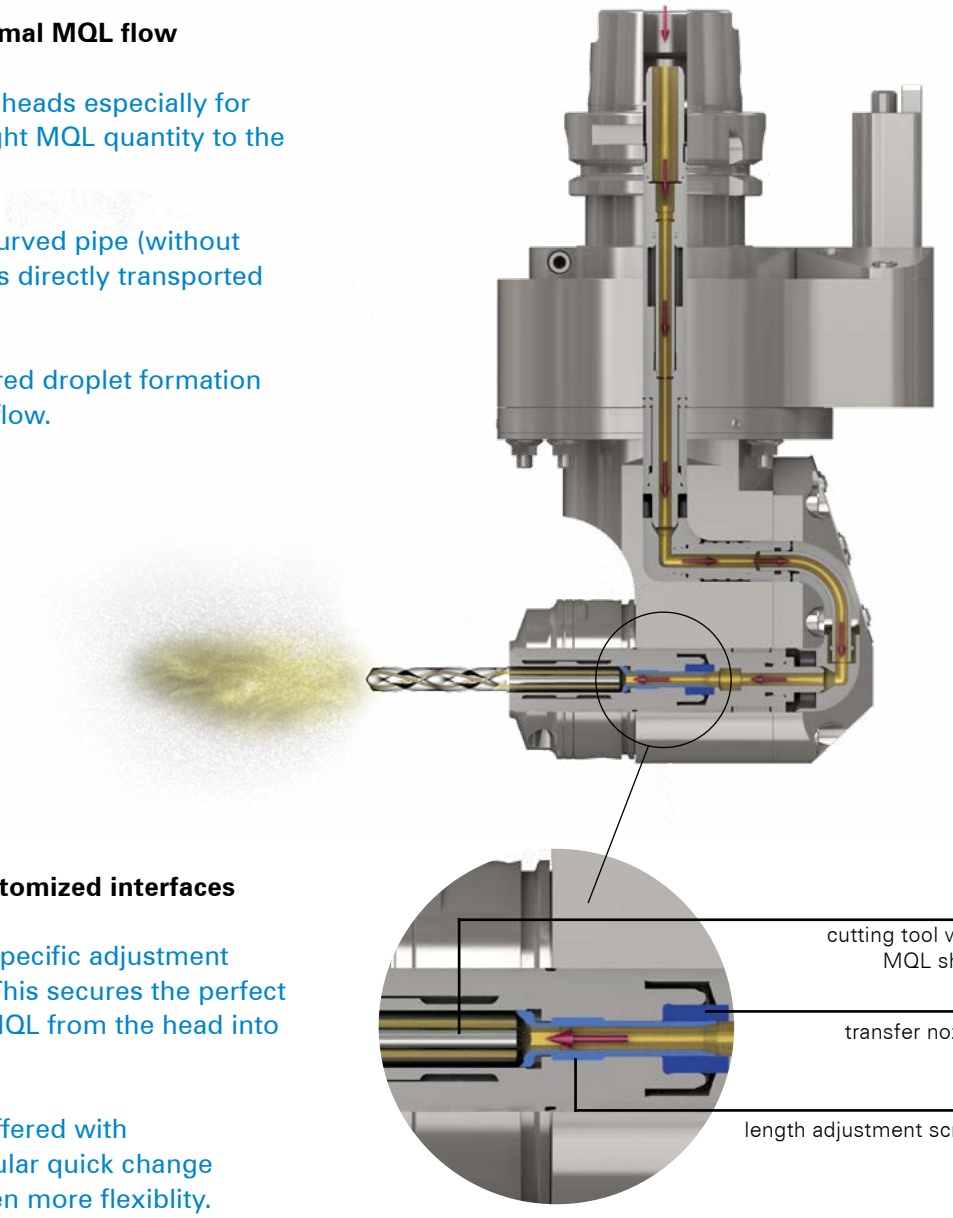

Perfect media transfer by customized interfaces

Furthermore we are offering specific adjustment screws for your cutting tool. This secures the perfect interface and transfer of the MQL from the head into the cutting tool.

BENZ MQL angle heads are offered with colletspindle or with the modular quick change system BENZ Solidfix® for even more flexiblity.

GEARBOX
LIFETIME LUBRICATION

GREASE LUBRICATING



Cyclical machining

All BENZ units are equipped with grease lubrication as a standard feature.

By using grease, long-lasting and durable lubrication is achieved. This type of lubrication permits effective load-carrying capacity, which reduces the wear and friction properties of the gearbox and thus increases the service life of the components.

In addition, the grease provides additional sealing and thus protects against the intrusion of dirt and other impurities into the gearbox.

Due to the permanent grease lubrication, no additional grease needs to be applied during the entire service life.

The installation position of the angle head is not relevant with this type of lubrication.



OIL MIST LUBRICATION – UNIQUE SOLUTIONS

Continuous machining and highest speeds

Oil mist lubrication is a state-of-the-art lubrication technology that produces fine oil droplets in an air stream, ensuring efficient and consistent distribution of the lubricant in the gearbox.

This approach allows the lubrication of hard-to-reach areas that are often neglected by other lubrication methods.

Additionally, the oil mist airflow creates a cooling effect, which contributes to better temperature control of the lubricated parts and also makes it possible to drive at high speeds.

Oil mist lubricated BENZ units can be used in continuous operation – without any breaks – and are suitable for high load volumes.

In case your existing machine cannot provide oil mist, we will be happy to offer you a suitable oil mist unit – please get in touch with us.

The installation position of the angle head is not relevant for this type of lubrication.

This technology is used exclusively in our unique, custom-made solutions.

More benefits

- additional sealing effect due to overpressure in the unit
- permanent renewal of the lubricant
- adjustable lubricant quantity
- significant extension of the service life of the angle head due to good corrosion protection





BENZ i.tag
DIGITAL NAME PLATE

That black dot with NFC logo on your tool catches your eye and you wonder what it is?

You have discovered BENZ i.tag, the Digital Nameplate! Simply scan the dot (tag) with your smartphone and access your product data anytime and anywhere.

BENEFITS

+ time saving: Technical data & documents always at hand and available
+ quick and easy handling via smartphone, no special software required
+ contact the service team directly via online form, direct phone call or e-mail
+ worldwide availability, link can be sent
+ save storage and logistics costs (no more paper documents)
+ you work sustainably and protect the environment by saving paper
+ your tool data is safely managed: BENZ i.tag can be read out, but does not collect or send any data itself



With BENZ i.tag your tool always carries all important information with it!

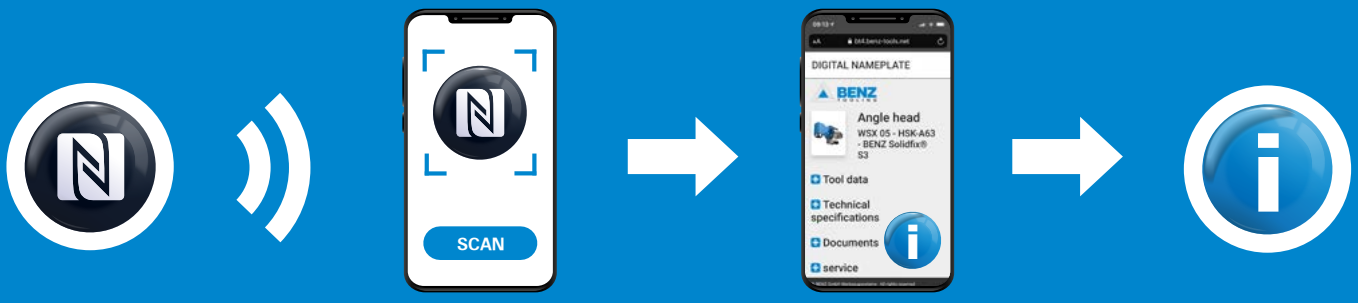

1 Find the NFC tag

2 Scan the NFC tag

3 Get access to information

4 Use the Information

1 PREPARE SCAN

Activate on your smartphone

NFC

Internet connection via WLAN or mobile data

Installed on your smartphone

PDF Viewer App

2 SCAN CORRECTLY



The NFC sensor of your smartphone is usually located around the camera or in the center.

Hold this area to the NFC tag of the tool.

Once the scan is successful, the data and documents automatically open in the browser

3 ALL AT A GLANCE

- tool data
- technical data
- documents (e.g. operating instructions)
- direct contact to service
- videos (if available)

4 DOWNLOAD, SHARE, CONTACT

View, download or share documents. Quickly clarify questions with PDF search function.

Share i.tag link with co-workers: Access to all stored data

Get in a contact with the service (by online-form, direct-telephone or e-mail).

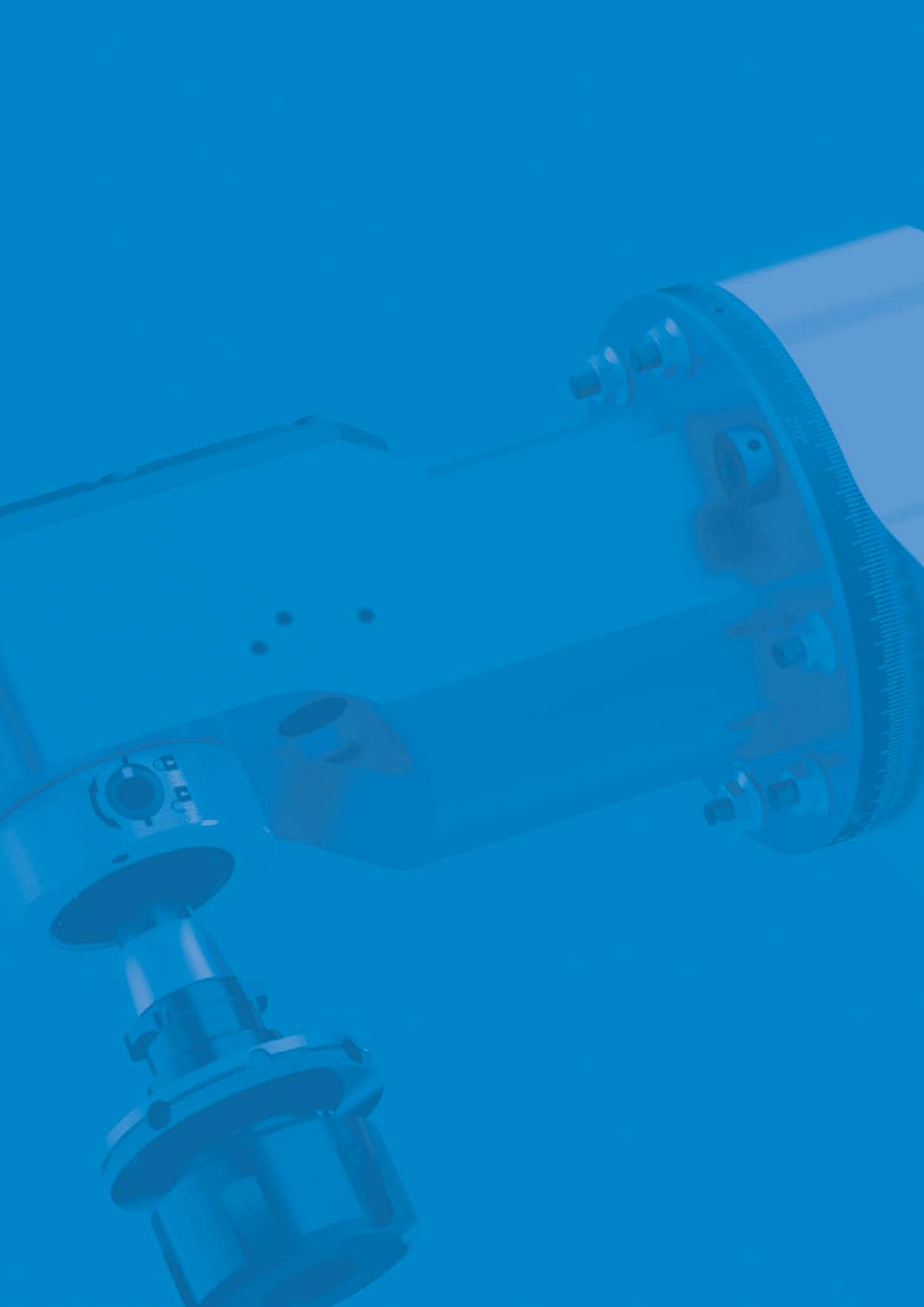

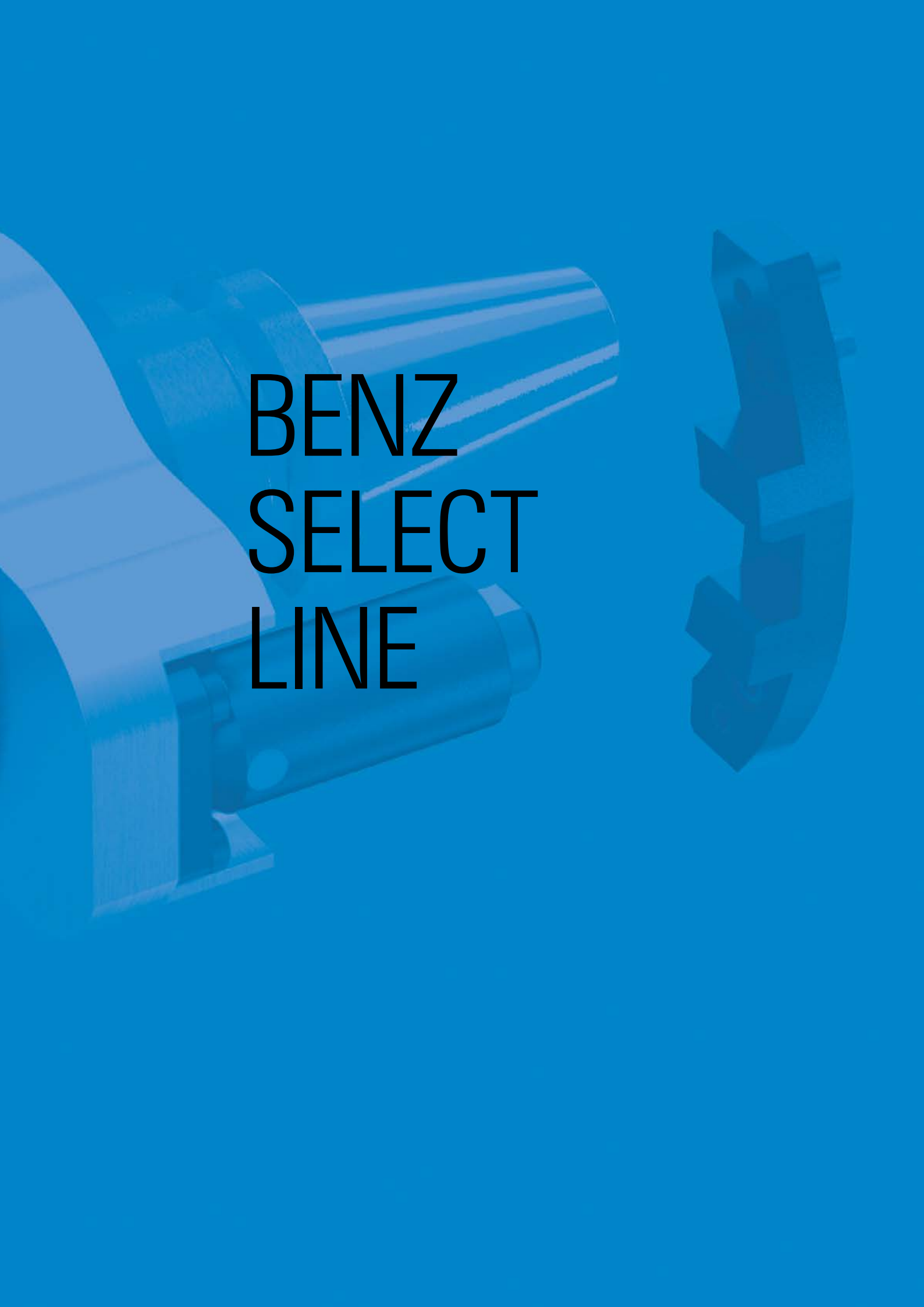

BENZ SELECT LINE

BENZ SELECT LINE
PRODUCT OVERVIEW

DESIGNS



1

MONO WSX

Angle head 90°

Machining: without spatial constraint

page 36



2

FORTE WWX

Angle head 90°
reset output spindle

Machining: for spatial constraint / maximum useable tool length

page 38

LOCKING

BLP EDITION





Stop block
BLP

TLP EDITION





Stop block
TLP

detailed information about
BENZ Stop block from page 36

TAPERS



HSK
DIN 69893



Steep taper
SK



Steep taper
MAS BT



Steep taper
CAT



3

FORTE WWX (EC+IC)

Angle head 90°
reset output spindle

Machining: for spatial constraint / maximum useable tool length

page 40

ORDER INFORMATION

BLP EDITION

Technical data

TLP EDITION

Technical data

ADAPTER



BENZ Solidfix®
S3 Collect chuck adapter



BENZ Solidfix®
S4 Collect chuck adapter

ACCESSORIES OPTIONAL

STARTER SET



Mounting block



Allen key



Hook wrench



Clamping wrench

i all SELECT LINE products including adapter and stop block

ANGLE HEAD
BENZ SELECT LINE – MONO WSX

TECHNICAL DATA

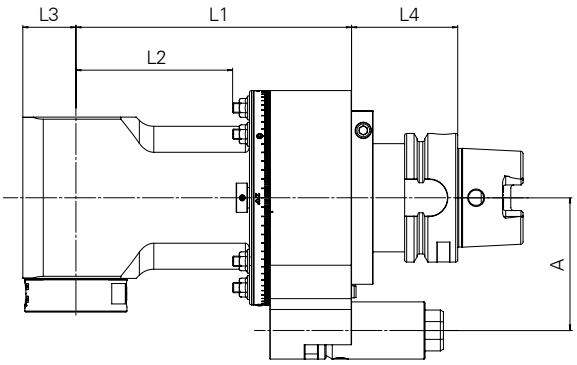

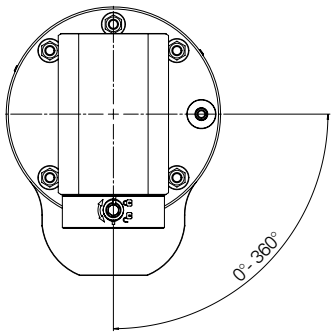

05

M_{max}	30 Nm
i	1:1
n_{max}	8.000 rpm


BLP


TLP

OUTPUT SPINDLE

BENZ Solidfix®-S3

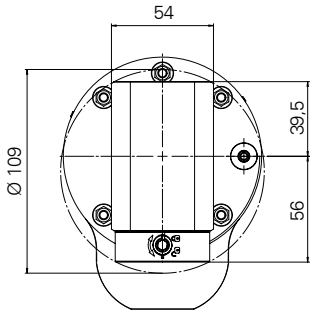

Stop block

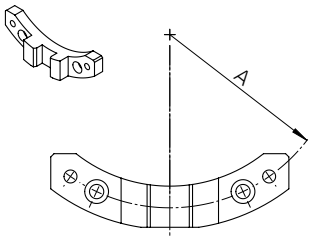

Stop block Size	Technical data A [mm]
HSK-A63	65 | 80
HSK-A100*	80 | 110
SK40 | CAT40	65 | 80
SK50 | CAT50*	80 | 110
BT40	65 | 80
BT50	80 | 110

*for BLP edition only

i for easy commissioning – starter set available

FRONT HEAD

Type Size	Technical data L1 [mm]	L2 [mm]	KG
05	135	73,5	5,6

+OUTPUT SPINDLE

Type Size	Technical data L3 [mm]	+ KG
S3	26	0

+TAPER

Type Size	Technical data L4 [mm]	+ KG
HSK-A63	52	0
HSK-A100	55	1,7
SK40 | CAT40	45	0,1
SK50 | CAT50	45	2,2
BT40	53	0,4
BT50	60	3,5

TECHNICAL DATA

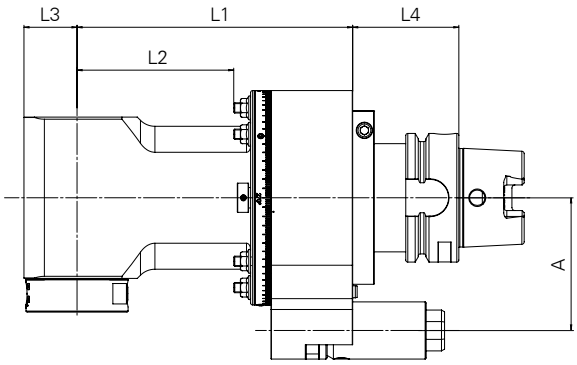

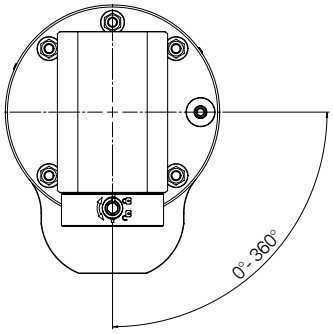

07

M_{max}	70 Nm
i	1:1
n_{max}	6.000 rpm


BLP


TLP

1

OUTPUT SPINDLE

BENZ Solidfix®-S4

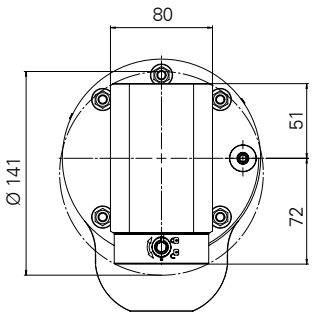

Stop block

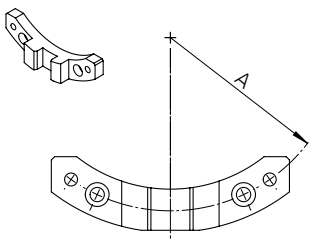

Stop block Size	Technical data A [mm]
HSK-A63	65 | 80
HSK-A100*	80 |110
SK40 | CAT40	65 | 80
SK50 | CAT50*	80 |110
BT40	65 | 80
BT50	80 |110

*for BLP edition only

i for easy commissioning – starter set available

FRONT HEAD

Typee Size	Technical data L1 [mm]	L2 [mm]	KG
07	150	88	8,7

+OUTPUT SPINDLE

Type Size	Technical data L3 [mm]	+ KG
S4	35	0

+MACHINE CONNECTION

Type Size	Technical data L4 [mm]	+ KG
HSK-A63	52	0
HSK-A100	55	1,9
SK40 | CAT40	45	0,1
SK50 | CAT50	45	2,2
BT40	53	0,4
BT50	60	3,5

ANGLE HEAD
BENZ SELECT LINE – FORTE WWX

TECHNICAL DATA

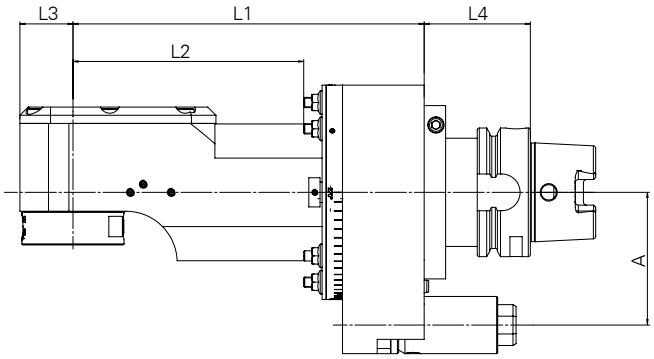

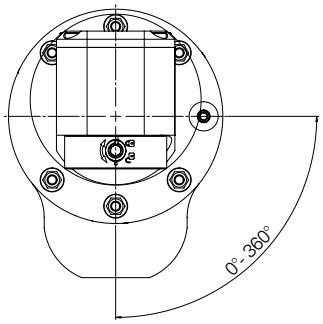

05

M_{max}	30 Nm
i	1:1
n_{max}	8.000 rpm


BLP


TLP

OUTPUT SPINDLE

BENZ Solidfix®-S3

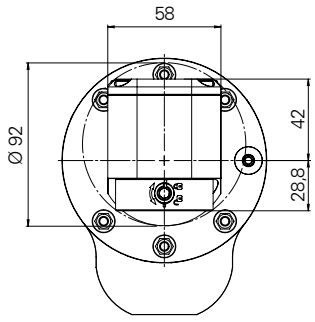

Stop block

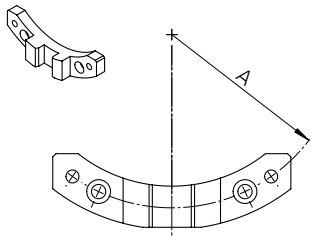

Stop block Size	Technical data A [mm]
HSK-A63	65 | 80
HSK-A100*	80 | 110
SK40 | CAT40	65 | 80
SK50 | CAT50*	80 | 110
BT40	65 | 80
BT50	80 | 110

*for BLP edition only

i for easy commissioning – starter set available

FRONT HEAD

Type Size	Technical data L1 [mm]	L2 [mm]	KG
05	172	110,5	5,8

+OUTPUT SPINDLE

Type Size	Technical data L3 [mm]	+ KG
S3	26	0

+TAPER

Type Size	Technical data L4 [mm]	+ KG
HSK-A63	52	0
HSK-A100	55	1,7
SK40 | CAT40	45	0,1
SK50 | CAT50	45	2,2
BT40	53	0,4
BT50	60	3,5

TECHNICAL DATA

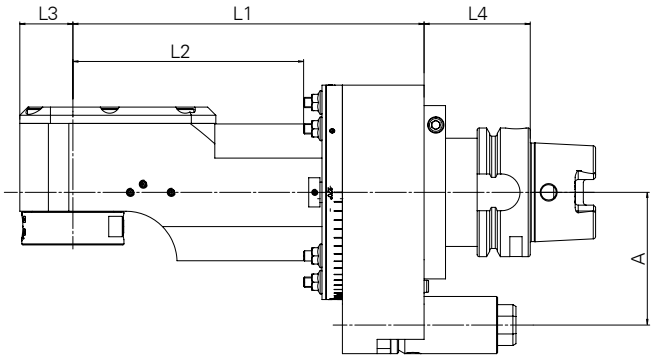

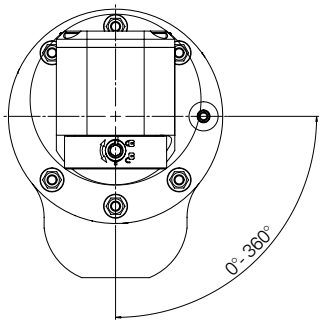

07

M_{max}	70 Nm
i	1:1
n_{max}	6.000 rpm


BLP


TLP

OUTPUT SPINDLE

BENZ Solidfix®-S4

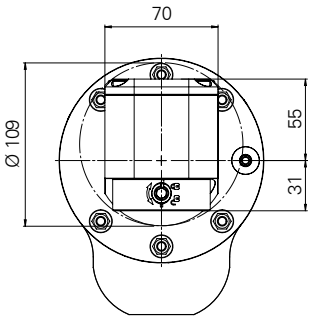

Stop block

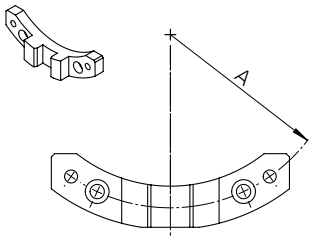

Stop block Size	Technical data A [mm]
HSK-A63	65 | 80
HSK-A100*	80 | 110
SK40 | CAT40	65 | 80
SK50 | CAT50*	80 | 110
BT40	65 | 80
BT50	80 | 110

*for BLP edition only

i for easy commissioning – starter set available

FRONT HEAD

Type Size	Technical data L1 [mm]	L2 [mm]	KG
07	200	138	8,6

+OUTPUT SPINDLE

Type Size	Technical data L3 [mm]	+ KG
S4	35	0

+TAPER

Type Size	Technical data L4 [mm]	+ KG
HSK-A63	52	0
HSK-A100	55	1,9
SK40 | CAT40	45	0,1
SK50 | CAT50	45	2,2
BT40	53	0,5
BT50	60	3,7

ANGLE HEAD
BENZ SELECT LINE – FORTE WWX (EC+IC)

TECHNICAL DATA

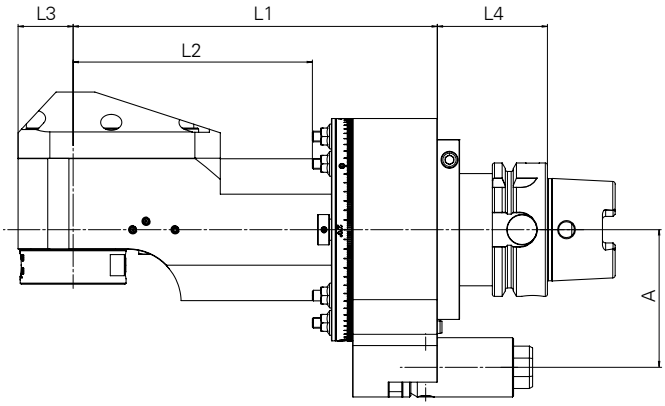

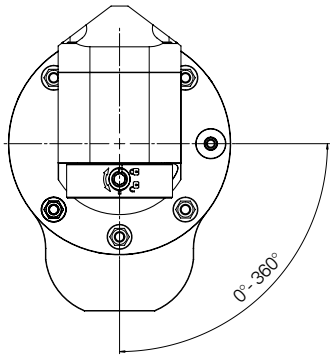

05

M_{max}	30 Nm
i	1:1
n_{max}	8.000 rpm


BLP


TLP

OUTPUT SPINDLE

BENZ Solidfix®-S3

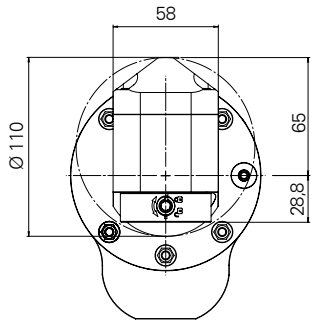

Stop block

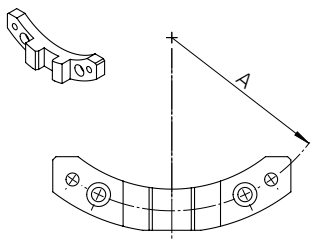

Stop block Size	Technical data A [mm]
HSK-A63	65 | 80
HSK-A100*	80 | 110
SK40 | CAT40	65 | 80
SK50 | CAT50*	80 | 110
BT40	65 | 80
BT50	80 | 110

*for BLP edition only

i for easy commissioning – starter set available

FRONT HEAD

Type Size	Technical data L1 [mm]	L2 [mm]	KG
05	172	110,5	5,9

+OUTPUT SPINDLE

Type Size	Technical data L3 [mm]	+ KG
S3	26	0

+TAPER

Type Size	Technical data L4 [mm]	+ KG
HSK-A63	52	0
HSK-A100	55	1,7
SK40 | CAT40	45	0,1
SK50 | CAT50	45	2,2
BT40	53	0,4
BT50	60	3,5

TECHNICAL DATA

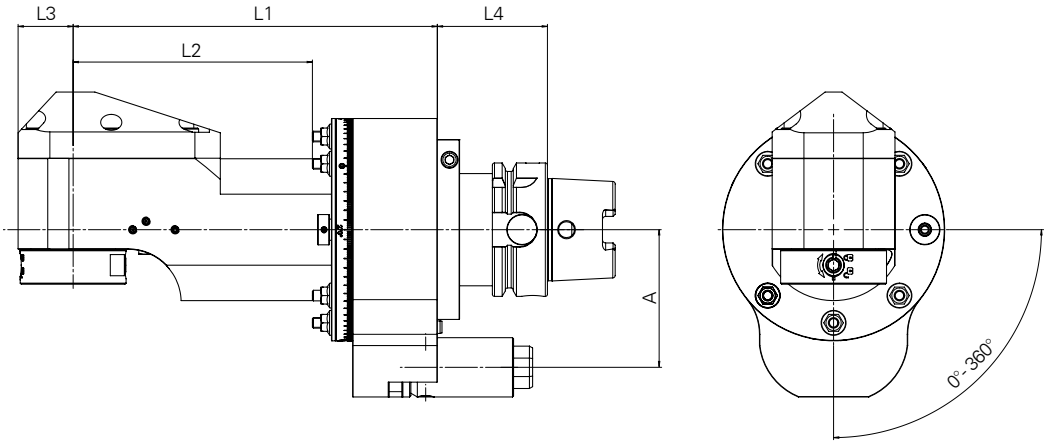

07

M_{max}	70 Nm
i	1:1
n_{max}	6.000 rpm


BLP


TLP

OUTPUT SPINDLE

BENZ Solidfix®-S4

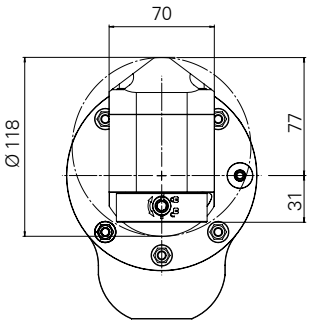

Stop block

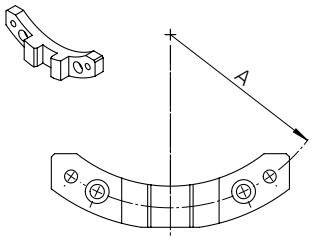

Stop block Size	Technical data A [mm]
HSK-A63	65 | 80
HSK-A100*	80 | 110
SK40 | CAT40	65 | 80
SK50 | CAT50*	80 | 110
BT40	65 | 80
BT50	80 | 110

*for BLP edition only

i for easy commissioning – starter set available

FRONT HEAD

Type Size	Technical data L1 [mm]	L2 [mm]	KG
07	200	138	8,7

+OUTPUT SPINDLE

Type Size	Technical data L3 [mm]	+ KG
S4	35	0

+TAPER

Type Size	Technical data L4 [mm]	+ KG
HSK-A63	52	0
HSK-A100	55	1,9
SK40 | CAT40	45	0,1
SK50 | CAT50	45	2,2
BT40	53	0,5
BT50	60	3,7

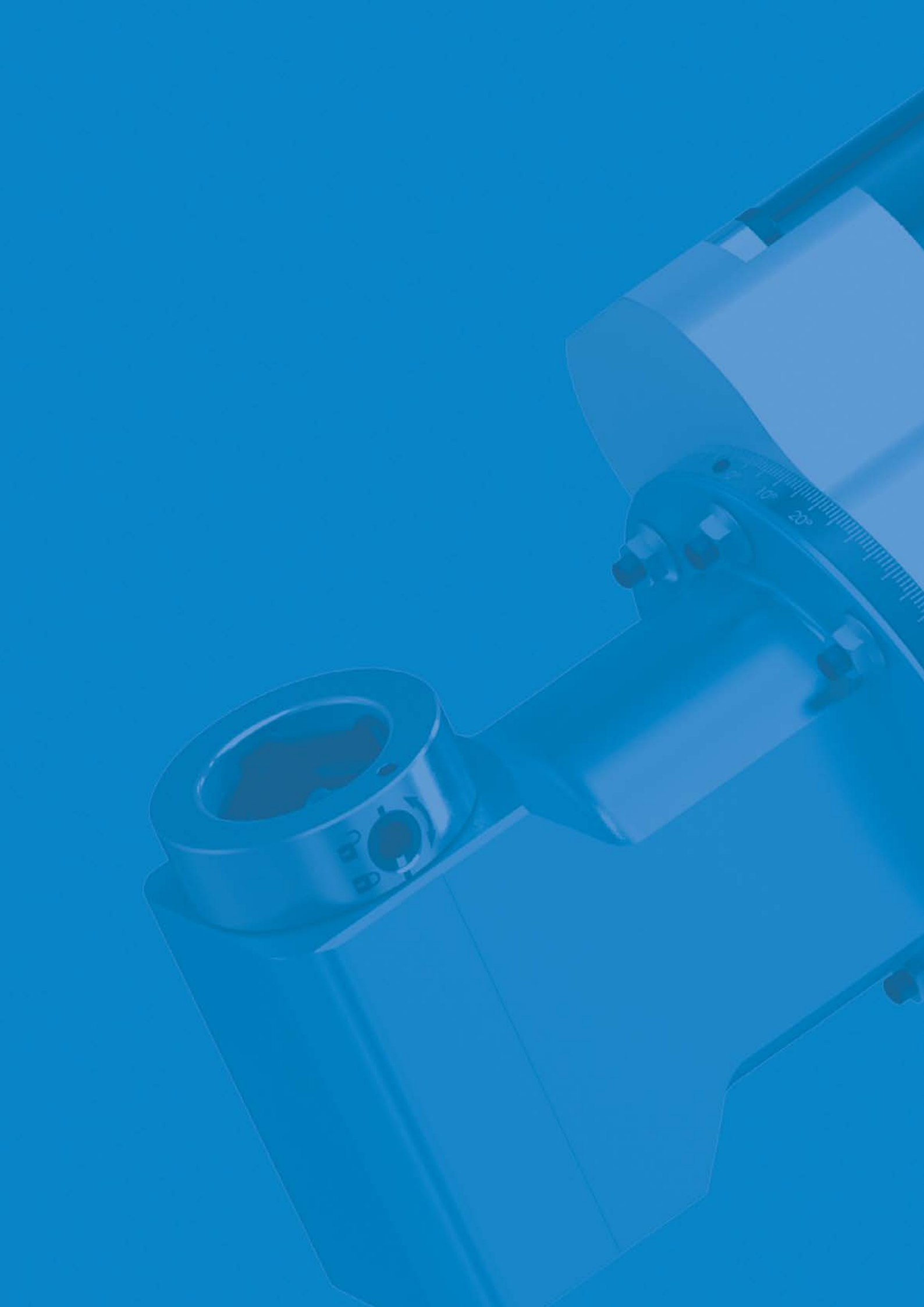



BENZ ANGLE HEADS

BENZ ANGLE HEADS
PRODUCT OVERVIEW

DESIGNS



1

MONO WSX

Angle head 90°

Machining: without spatial constraint

page 46



2

DUO WZX

Angle head 90°
output spindle on both sides

Machining: in opposite direction / with different tools

page 54



3

FORTE WWX (EC)

Angle head 90°
reset output spindle

Machining: for spatial constraint / maximum useable tool length

page 62



4

FORTE WWX (IC)

Angle head 90°
reset output spindle

Machining: for spatial constraint / maximum useable tool length

page 68



5

SLIM WGX

Angle head 90°
narrow design

Machining: for spatial constraint / maximum useable tool length

page 72



6

SLIM WG-S / WGX-S

Angle head 90°
extremely narrow design

Machining: for extreme spatial constraint / maximum useable tool length

page 78



7

FLEX WDX

Angle head 0°-100°
with flexible angle / stepless adjustment

Machining: in any variable position

page 88



8

FIX WFX

Angle head 0°-120°
with fixed angle

Machining: special machining at fixed angle

page 94

ANGLE HEAD
MONO WSX

ANGLE HEAD 90° – SINGLE OUTPUT SPINDLE

Angle head for machining without spatial constraint

Feasible on request: external cooling (EC), internal cooling (IC) or EC/IC combination

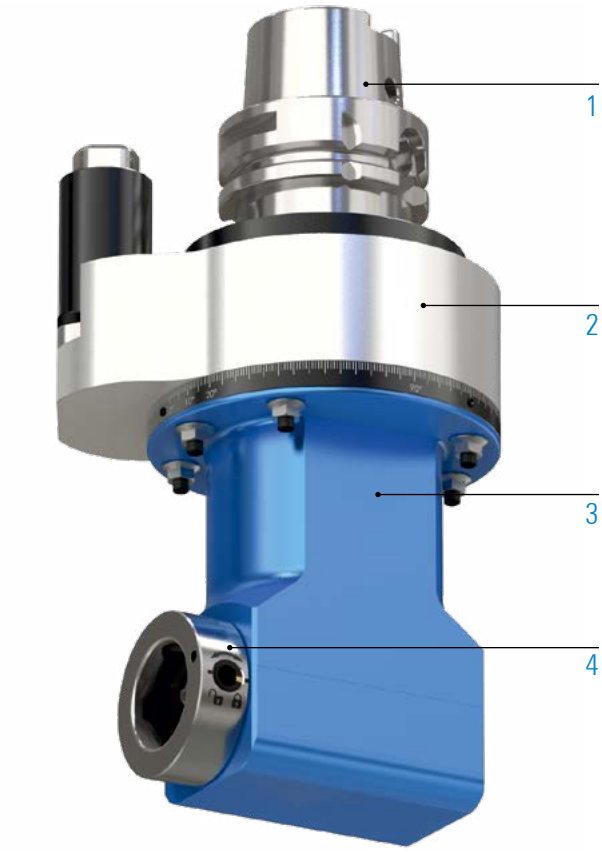

1 TAPER


HSK
DIN 69893


Steep taper
SK


Steep taper
MAS BT


Steep taper
CAT


Coromant
Capto®


KM™

2 TORQUE ARM

optional: customized torque arm
more information on page 25

3 FRONT HEAD (SIZE)

04 | 05 | 07 | 15 | 20

4 OUTPUT SPINDLE


BENZ
Solidfix®


BENZ
CAPTO™


Collet chuck


Weldon


Whistle
Notch


Milling arbor


HSK


KM™

MACHINING

- drilling
- milling
- tapping

SPECIFICATIONS

- amount of output spindles
- axis angle
- change the angle head
- grease lubrication
- without cooling
- external cooling (on request)
- internal cooling (on request)
- exteral / internal cooling (on request)

ANGLE HEAD
MONO WSX

TECHNICAL DATA

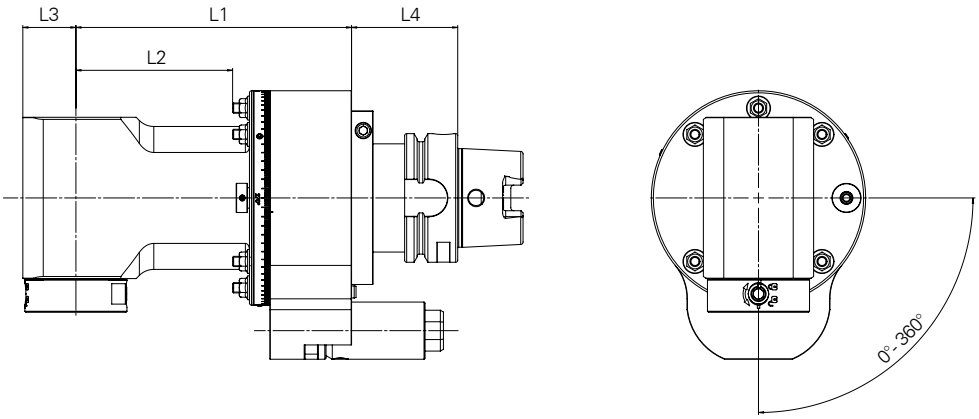

04

M_{max}	15 Nm
i	1:1
n_{max}	10.000 rpm

OUTPUT SPINDLE

BENZ Solidfix®-S2

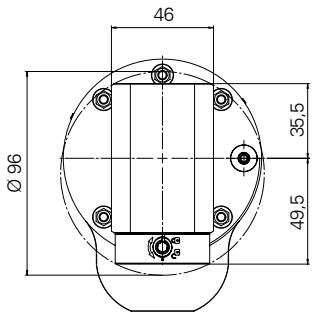

Collet chuck-ER16A

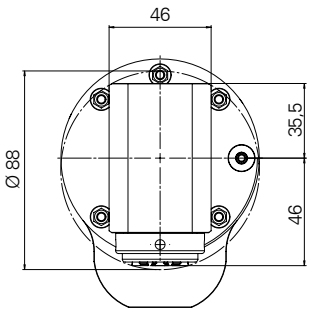

Collet chuck-ER20A

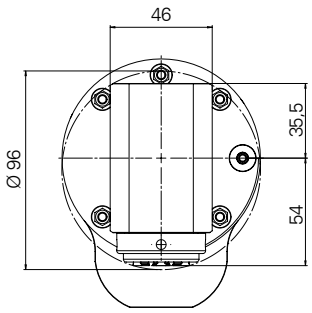

i technical data for other output spindles on request

FRONT HEAD

Type Size	Technical data L1 [mm]	L2 [mm]	KG
04	145	93,5	4,1

+OUTPUT SPINDLE

Type Size	Technical data L3 [mm]	+ KG
S2	24	0
ER16A	24	0
ER20A	24	0

+TAPER

Type Size	Technical data L4 [mm]	+ KG
HSK-A63	52	0
HSK-A100	55	1,5
Capto C6 | SK40 | CAT40	45	0,1
Capto C8	45	0,9
SK50 | CAT50	45	2
BT40	53	0,4
BT50	60	3,3

TECHNICAL DATA

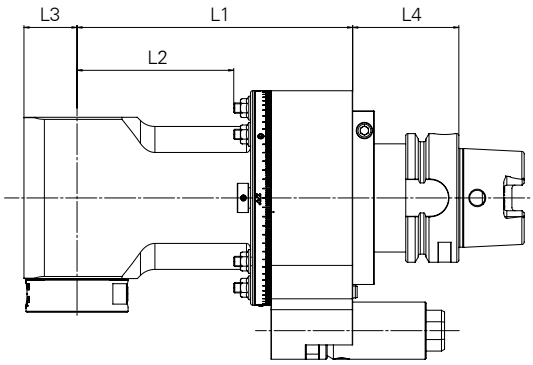

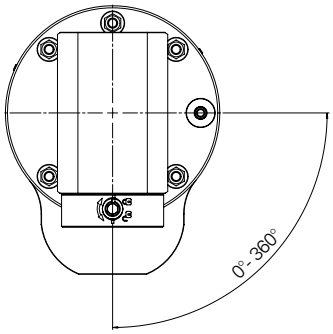

05

M_{max}	30 Nm
i	1:1
n_{max}	8.000 rpm

OUTPUT SPINDLE

BENZ Solidfix®-S3

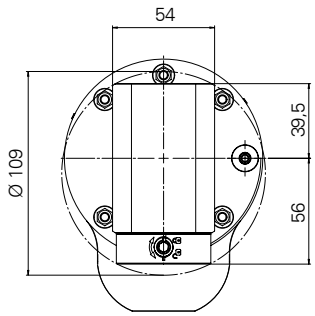

Collet chuck-ER25A

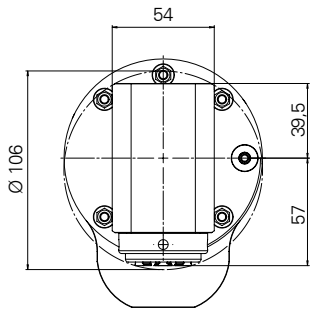

BENZ CAPTO™-C3

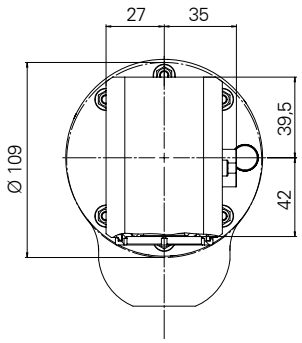

i technical data for other output spindles on request

FRONT HEAD

Type Size	Technical data L1 [mm]	L2 [mm]	KG
05	88*	26,5	4,8
	135	73,5	5,6
	195	133,5	6,4

* short size: output spindle BENZ CAPTO™ not possible

+OUTPUT SPINDLE

Type Size	Technical data L3 [mm]	+ KG
S3	26	0
ER25A	26	0
C3	30,5	1

+TAPER

Type Size	Technical data L4 [mm]	+ KG
HSK-A63	52	0
HSK-A100	55	1,7
Capto C6 | SK40 | CAT40	45	0,1
Capto C8	45	1,0
SK50 | CAT50	45	2,2
BT40	53	0,4
BT50	60	3,5

ANGLE HEAD
MONO WSX

TECHNICAL DATA

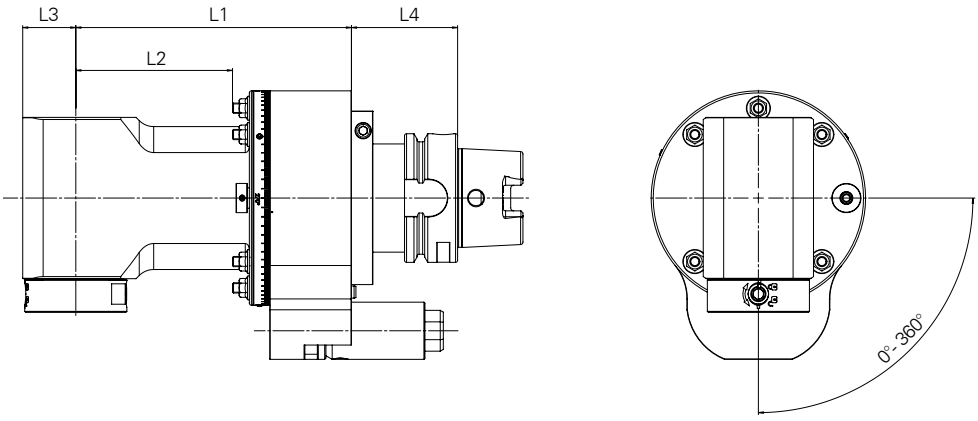

07

M_{max}	70 Nm
i	1:1
n_{max}	6.000 rpm

OUTPUT SPINDLE

BENZ Solidfix®-S4

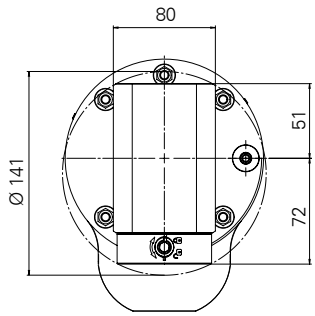

Collet chuck-ER32A

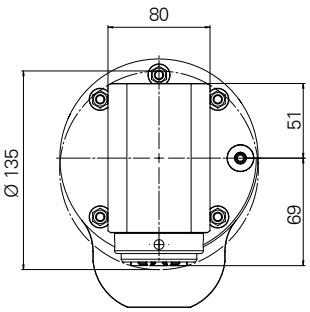

BENZ CAPTO™-C4

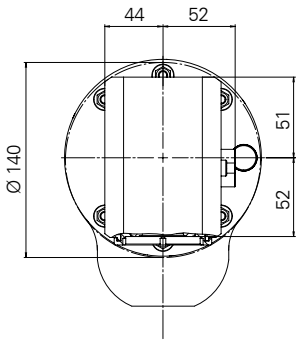

i technical data for other output spindles on request

FRONT HEAD

Type Size	Technical data L1 [mm]	L2 [mm]	KG
07	105	43,5	7,5
	150	88	8,7
	215	153,5	10,1

+OUTPUT SPINDLE

Type Size	Technical data L3 [mm]	+ KG
S4	35	0
ER32A	35	0
C4	37	0,5

+TAPER

Type Size	Technical data L4 [mm]	+ KG
HSK-A63	52	0
HSK-A100	55	1,9
Capto C6 | SK40 | CAT40	45	0,1
Capto C8	45	1,0
SK50 | CAT50	45	2,2
BT40	53	0,5
BT50	60	3,5

TECHNICAL DATA

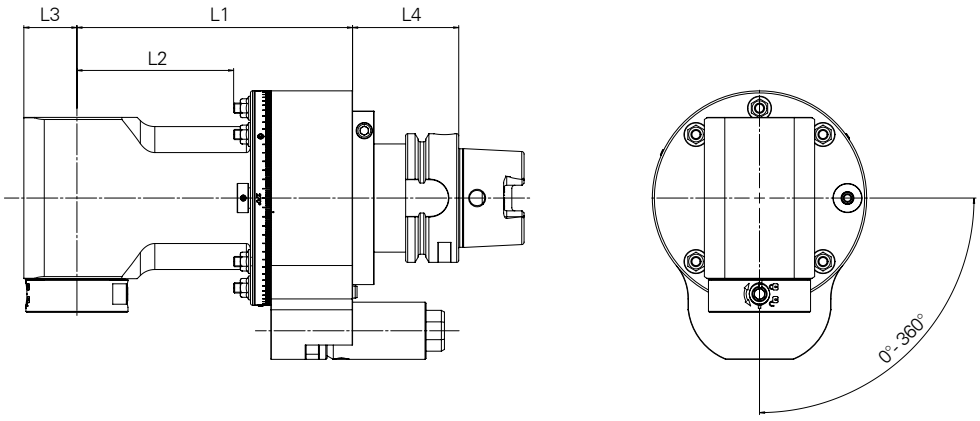

15

M_{max}	150 Nm
i	1:1
n_{max}	4.000 rpm

OUTPUT SPINDLE

BENZ Solidfix®-S5

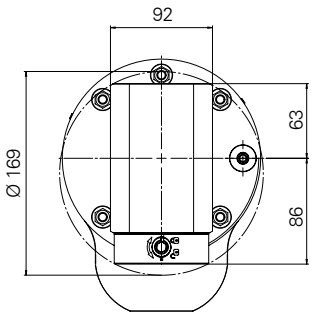

Collet chuck-ER40A

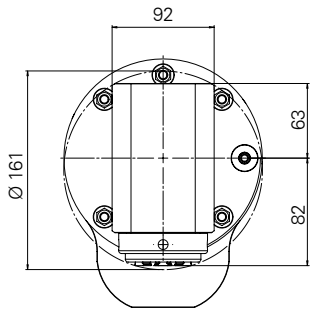

BENZ CAPTO™-C5

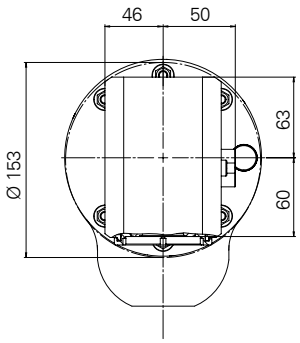

i technical data for other output spindles on request

FRONT HEAD

Type Size	Technical data L1 [mm]	L2 [mm]	KG
15	155	85,5	14,1
	225	155,5	16,3
	298	228,5	19,1

+OUTPUT SPINDLE

Type Size	Technical data L3 [mm]	+ KG
S5	40	0
ER40A	40	0
C5	44	0

+TAPER

Type Size	Technical data L4 [mm]	+ KG
HSK-A100	55	0
Capto C8	45	-0,8
SK50 | CAT50	45	0,3
BT50	60	2,9

ANGLE HEAD
MONO WSX

TECHNICAL DATA

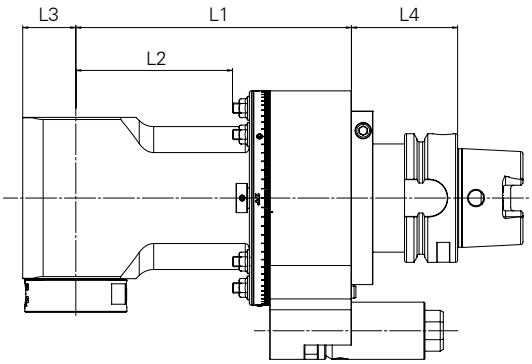

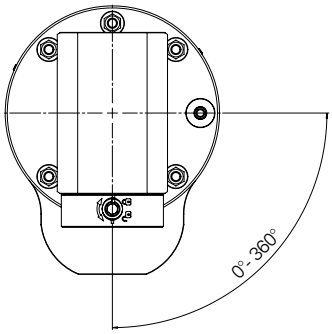

20

M_{max}	230 Nm
i	1:1
n_{max}	3.000 rpm

OUTPUT SPINDLE

BENZ Solidfix®-S5

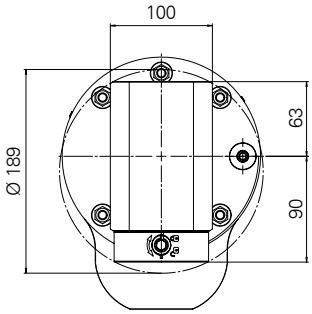

Collet chuck-ER50

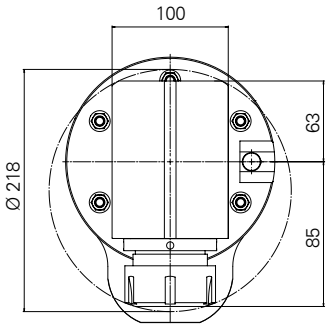

BENZ CAPTO™-C6

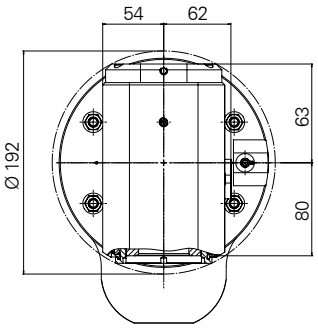

i technical data for other output spindles on request

FRONT HEAD

Type Size	Technical data L1 [mm]	L2 [mm]	KG
20	171	101	20,4
	241	171	21,2
	311	241	24,4

+OUTPUT SPINDLE

Type Size	Technical data L3 [mm]	+ KG
S5	45	0
ER50	45	0
C6	50	0,6

+TAPER

Type Size	Technical data L4 [mm]	+ KG
HSK-A100	55	0
Capto C8	45	-0,8
SK50 | CAT50	45	0,3
BT50	60	2,9


2-28149
BENZ

ANGLE HEAD
DUO WZX

ANGLE HEAD 90° – OUTPUT SPINDLE ON BOTH SIDES

Angle head with two output spindles arranged opposite each other and running in opposite directions

Feasible on request: external cooling (EC)

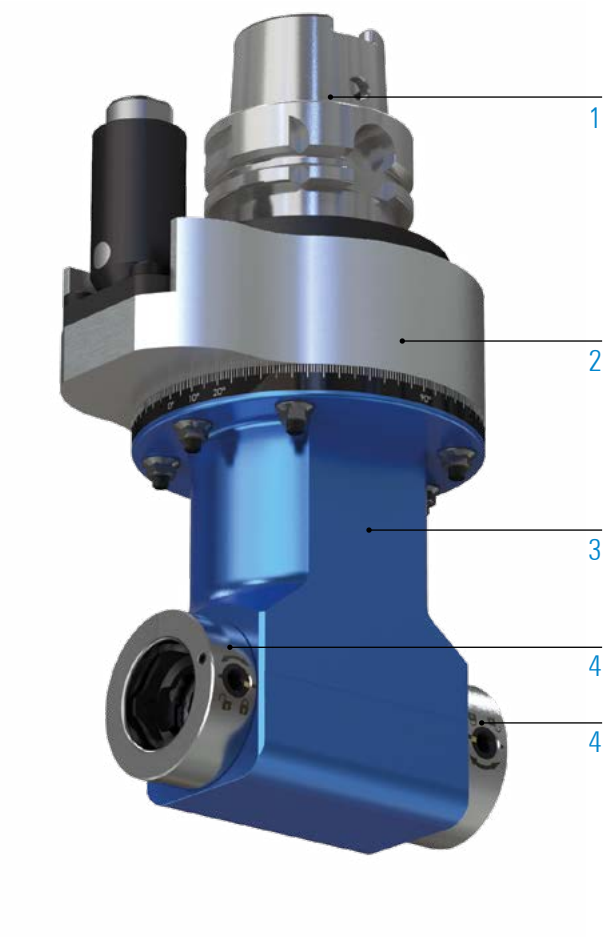

1 TAPER


HSK
DIN 69893


Steep taper
SK


Steep taper
MAS BT


Steep taper
CAT


Coromant
Capto®


KM™

2 TORQUE ARM

optional: customized torque arm
more information on page 25

3 FRONT HEAD (SIZE)

04 05 07 15 20

4 OUTPUT SPINDLE


BENZ
Solidfix®


BENZ
CAPTO™


Collet chuck


Weldon


Whistle
Notch


Milling arbor


HSK


KM™

MACHINING

drilling

milling

tapping

SPECIFICATIONS

amount of
output spindles

axis angle

change the
angle head

grease lubrication

without cooling

external cooling
(on request)

ANGLE HEAD
DUO WZX

TECHNICAL DATA

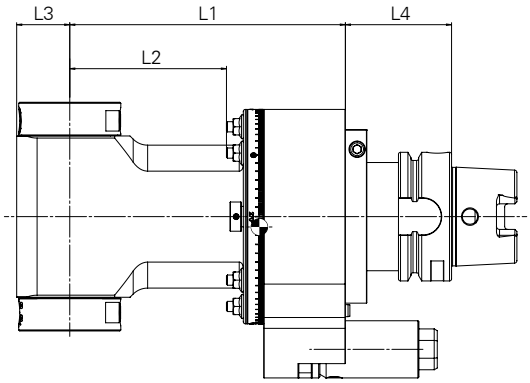

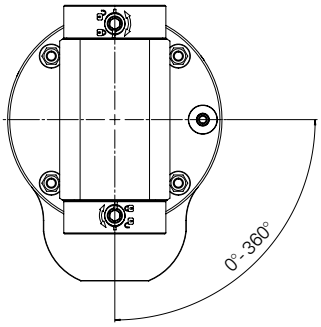

04

M_{max}	15 Nm
i	1:1
n_{max}	10.000 rpm

OUTPUT SPINDLE

BENZ Solidfix®-S2

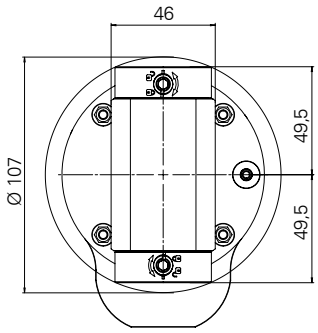

Collet chuck-ER 16A

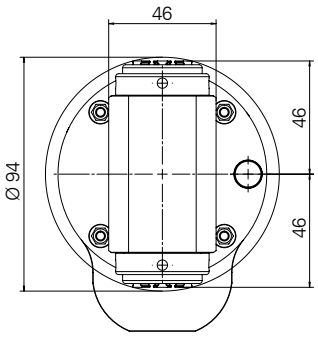

Collet chuck-ER 20A

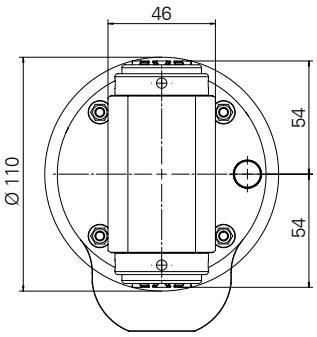

i technical data for other output spindles on request

FRONT HEAD

Type Size	Technical data L1 [mm]	L2 [mm]	KG
04	145	93,5	4,8

+OUTPUT SPINDLE

Type Size	Technical data L3 [mm]	+ KG
S2	24	0
ER16A	24	0
ER 20A	24	0

+TAPER

Type Size	Technical data L4 [mm]	+ KG
HSK-A63	52	0
HSK-A100	55	3
Capto C6 | SK40 | CAT40	45	0,1
Capto C8	45	2,4
SK50 | CAT50	45	3,6
BT40	53	-0,2
BT50	60	2,8

TECHNICAL DATA

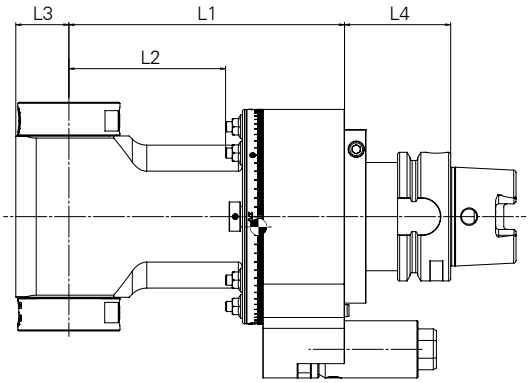

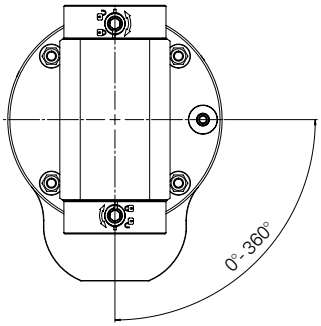

05

M_{max}	30 Nm
i	1:1
n_{max}	8.000 rpm

OUTPUT SPINDLE

BENZ Solidfix®-S3

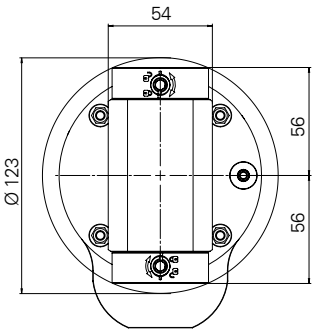

Collet chuck-ER 25A

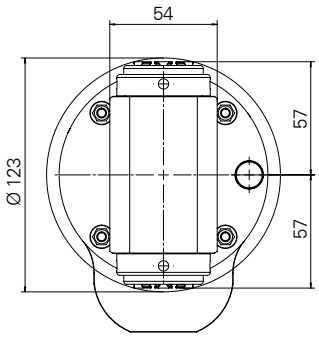

BENZ CAPTO™-C3

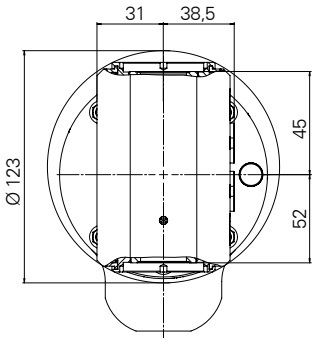

i technical data for other output spindles on request

FRONT HEAD

Type Size	Technical data L1 [mm]	L2 [mm]	KG
05	88*	26,5	5,4
	135	73,5	6,2
	195	133,5	6,8

* short size: output spindle BENZ CAPTO™ not possible

+OUTPUT SPINDLE

Type Size	Technical data L3 [mm]	+ KG
S3	26	0
ER25A	26	0
C3	30,5	0,5

+TAPER

Type Size	Technical data L4 [mm]	+ KG
HSK-A63	52	0
HSK-A100	55	3
Capto C6 | SK40 | CAT40	45	0,1
Capto C8	45	2,4
SK50 | CAT50	45	3,6
BT40	53	-0,1
BT50	60	3,1

ANGLE HEAD
DUO WZX

TECHNICAL DATA

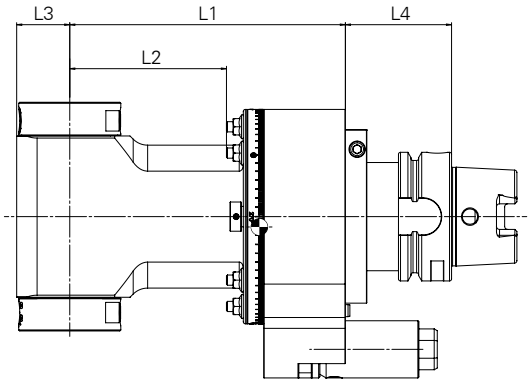

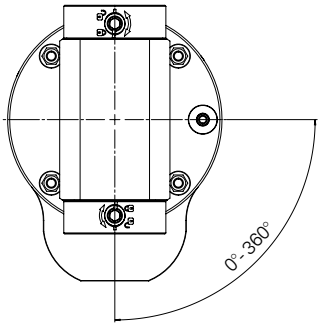

07

M_{max}	70 Nm
i	1:1
n_{max}	6.000 rpm

OUTPUT SPINDLE

BENZ Solidfix®-S4

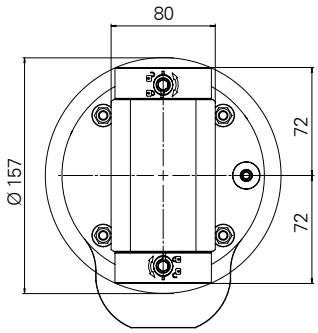

Collet chuck-ER32A

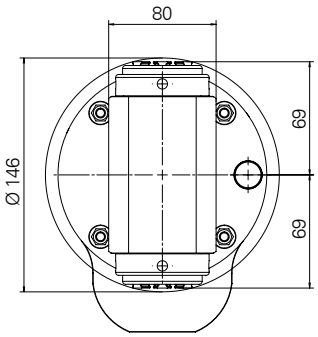

BENZ CAPTO™-C4

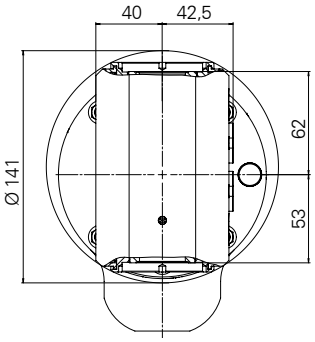

i technical data for other output spindles on request

FRONT HEAD

Type Size	Technical data L1 [mm]	L2 [mm]	KG
07	105	43,5	8,4
	150	88,5	9,4
	215	153,5	11,1

+OUTPUT SPINDLE

Type Size	Technical data L3 [mm]	+ KG
S4	35	0
ER32A	35	0
C4	37	1,0

+TAPER

Type Size	Technical data L4 [mm]	+ KG
HSK-A63	52	0
HSK-A100	55	1,9
Capto C6 | SK40 | CAT40	45	0,1
Capto C8	45	1,0
SK50 | CAT50	45	2,2
BT40	53	0,5
BT50	60	3,5

TECHNICAL DATA

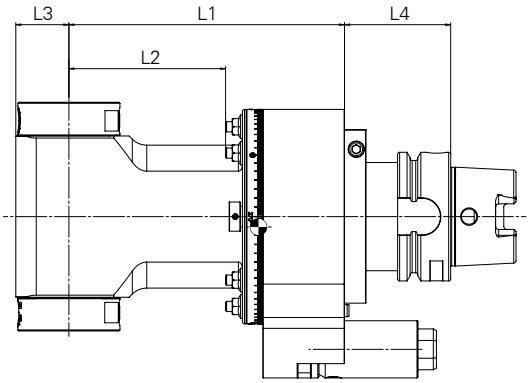

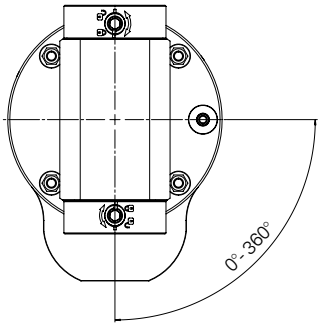

15

M_{max}	150 Nm
i	1:1
n_{max}	4.000 rpm

OUTPUT SPINDLE

BENZ Solidfix®-S5

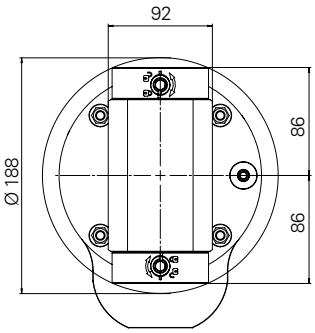

Collet chuck-ER40A

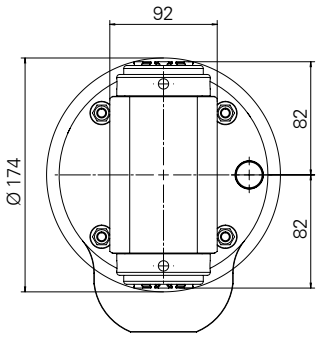

BENZ CAPTO™-C5

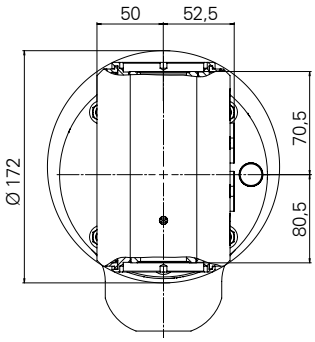

i technical data for other output spindles on request

FRONT HEAD

Type Size	Technical data L1 [mm]	L2 [mm]	KG
15	155	85,5	14,7
	225	155,5	16,9
	298	228,5	19,2

+OUTPUT SPINDLE

Type Size	Technical data L3 [mm]	+ KG
S5	40	0
ER40A	40	0
C5	44	5,5

+TAPER

Type Size	Technical data L4 [mm]	+ KG
HSK-A100	55	0
Capto C8	45	-0,8
SK50 | CAT50	45	0,3
BT50	60	2,9

ANGLE HEAD
DUO WZX

TECHNICAL DATA

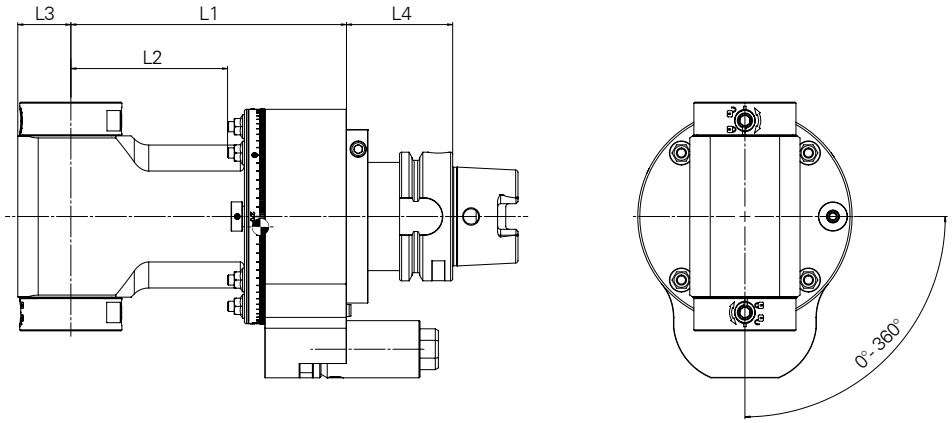

20

M_{max}	230 Nm
i	1:1
n_{max}	3.000 rpm

OUTPUT SPINDLE

BENZ Solidfix®-S5

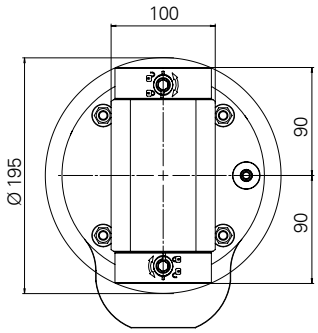

Collet chuck-ER40A

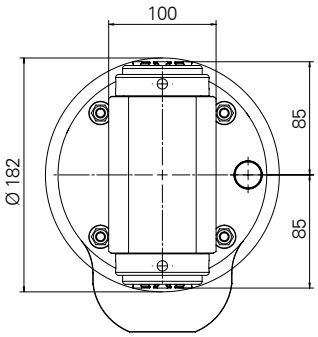

i technical data for other output spindles on request

FRONT HEAD

Type Size	Technical data L1 [mm]	L2 [mm]	KG
20	171	101	16,5
	241	171	19
	311	241	21,5

+OUTPUT SPINDLE

Type Size	Technical data L3 [mm]	+ KG
S5	45	0
ER40A	45	0

+TAPER

Type Size	Technical data L4 [mm]	+ KG
HSK-A100	55	0
Capto C8	45	-0,8
SK50 | CAT50	45	0,3
BT50	60	2,9

NOTES

ANGLE HEAD
FORTE WWX

ANGLE HEAD 90° – RESET OUTPUT SPINDLE

Angle head for machining for spatial constraint / maximum useable tool length

Product versions: external cooling (EC), internal cooling (IC) or EC/IC combination

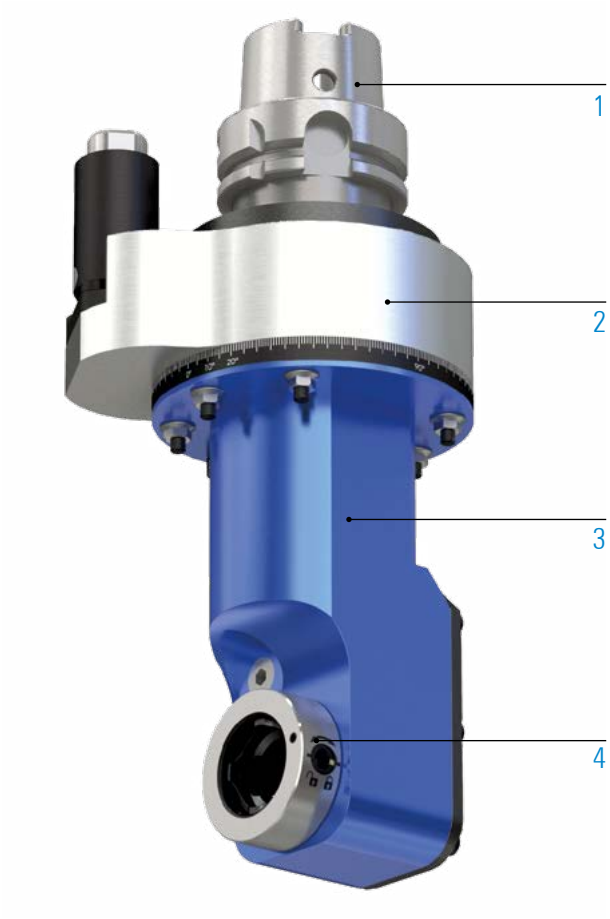

1 TAPER


HSK
DIN 69893


Steep taper
SK


Steep taper
MAS BT


Steep taper
CAT


Coromant
Capto®


KM™

2 TORQUE ARM

optional: customized torque arm
more information on page 25

3 FRONT HEAD (SIZE)

05 | 07 | 15 | 20

4 OUTPUT SPINDLE


BENZ
Solidfix®


BENZ
CAPTO™


Collet chuck


Weldon


Whistle
Notch


Milling arbor


HSK


KM™

MACHINING

- drilling
- milling
- tapping

SPECIFICATIONS

- amount of output spindles
- axis angle
- change the angle head
- grease lubrication

- without cooling
- external cooling
- internal cooling
- exteral / internal cooling
- MQL

ANGLE HEAD
FORTE WWX (EC)

TECHNICAL DATA

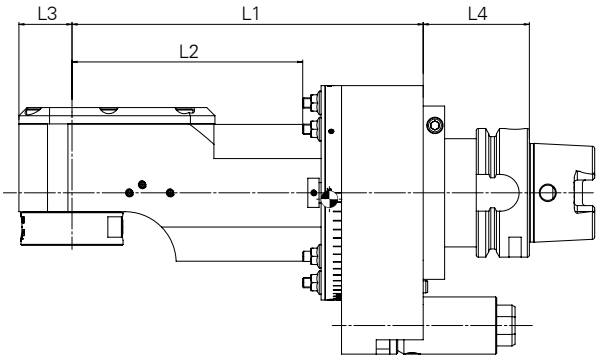

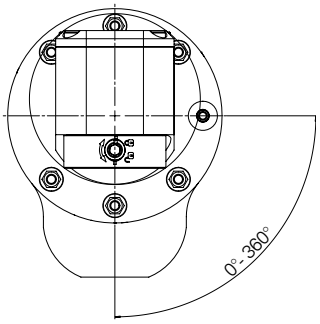

05

M_{max}	30 Nm
i	1:1
n_{max}	8.000 rpm

OUTPUT SPINDLE

BENZ Solidfix®-S3

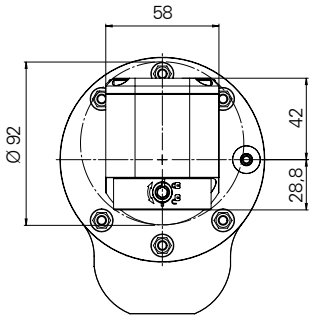

Collet chuck-ER 25A

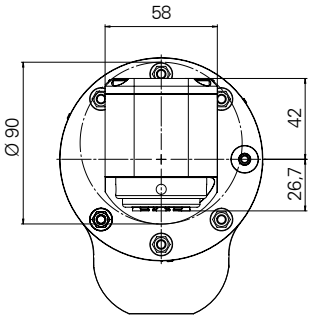

BENZ CAPTO™-C3

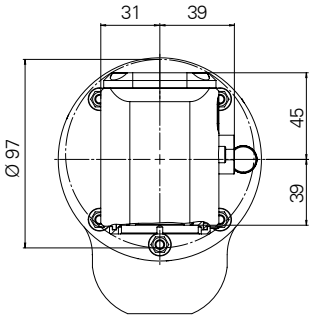

i technical data for other output spindles on request

FRONT HEAD

Type Size	Technical data L1 [mm]	L2 [mm]	KG
05	125	63,5	5,0
	172	110,5	5,8
	232	170,5	6,6

+OUTPUT SPINDLE

Type Size	Technical data L3 [mm]	+ KG
S3	26	0
ER25A	26	0
C3	30	0,6

+TAPER

Type Size	Technical data L4 [mm]	+ KG
HSK-A63	52	0
HSK-A100	55	1,7
Capto C6 | SK40 | CAT40	45	0,1
Capto C8	45	1
SK50 | CAT50	45	2,2
BT40	53	0,4
BT50	60	3,5

TECHNICAL DATA

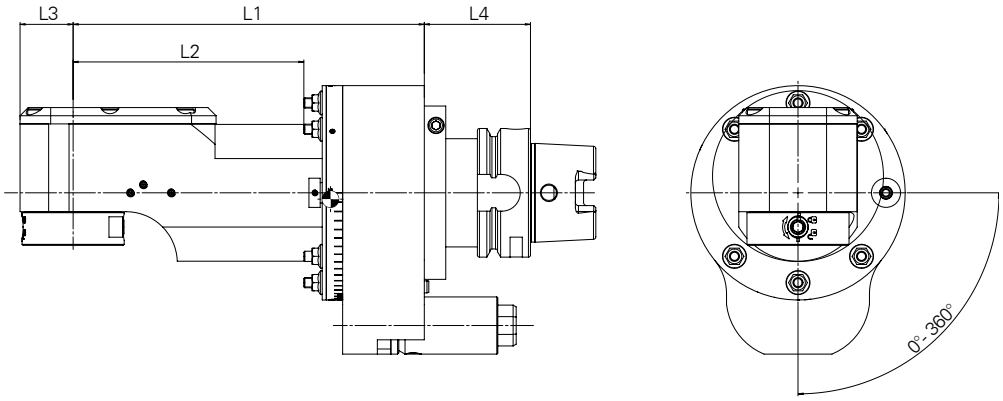

07

M_{max}	70 Nm
i	1:1
n_{max}	6.000 rpm

OUTPUT SPINDLE

BENZ Solidfix®-S4

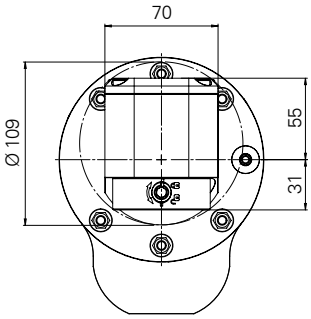

Collet chuck-ER32A

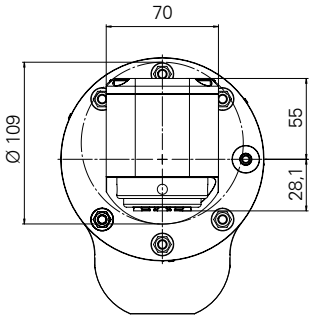

BENZ CAPTO™-C4

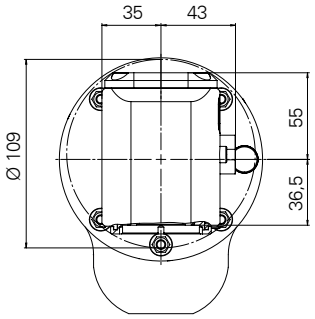

i technical data for other output spindles on request

FRONT HEAD

Type Size	Technical data L1 [mm]	L2 [mm]	KG
07	155	93,5	7,6
	200	138,5	8,6
	253	191,5	9,2

+OUTPUT SPINDLE

Type Size	Technical data L3 [mm]	+ KG
S4	35	0
ER32A	35	0
C4	35	1

+TAPER

Type Size	Technical data L4 [mm]	+ KG
HSK-A63	52	0
HSK-A100	55	1,9
Capto C6 | SK40 | CAT40	45	0,1
Capto C8	45	1
SK50 | CAT50	45	2,2
BT40	53	0,5
BT50	60	3,7

ANGLE HEAD
FORTE WWX (EC)

TECHNICAL DATA

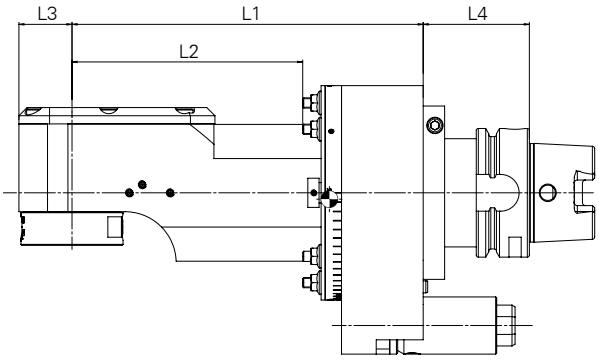

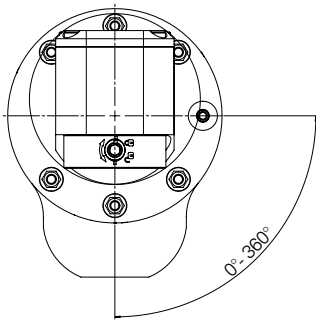

15

M_{max}	150 Nm
i	1:1
n_{max}	4.000 rpm

OUTPUT SPINDLE

BENZ Solidfix®-S5

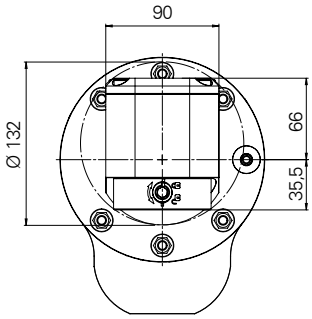

Collet chuck-ER 40A

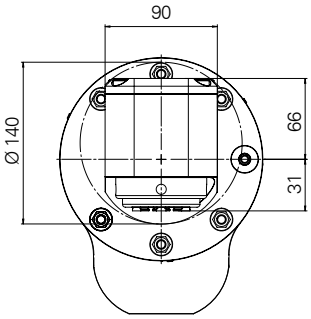

BENZ CAPTO™-C5

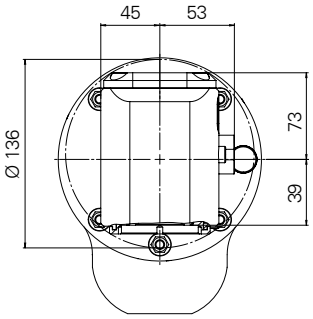

i technical data for other output spindles on request

FRONT HEAD

Type Size	Technical data L1 [mm]	L2 [mm]	KG
15	195	125,5	14,2
	232	162,5	14,8
	332	262,5	17,4

+OUTPUT SPINDLE

Type Size	Technical data L3 [mm]	+ KG
S5	40	0
ER40A	40	0
C5	42	2,1

+TAPER

Type Size	Technical data L4 [mm]	+ KG
HSK-A100	55	0
Capto C8	45	-0,8
SK50 | CAT50	45	0,3
BT50	60	1,8

TECHNICAL DATA

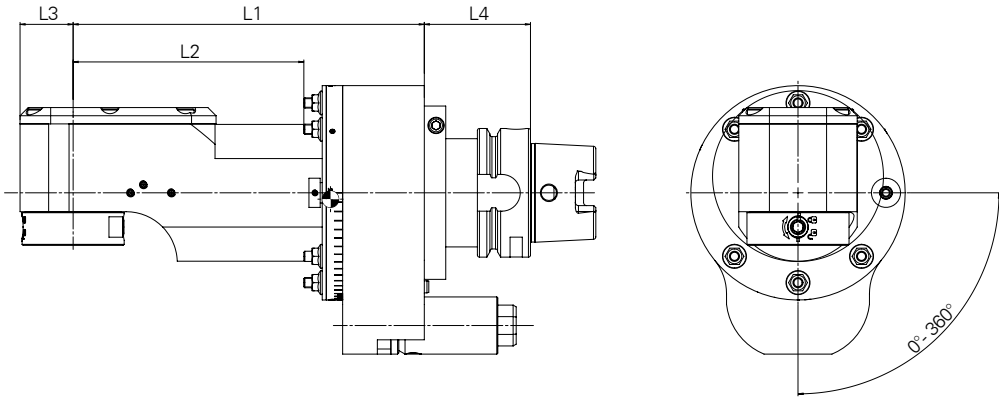

20

M_{max}	230 Nm
i	1:1
n_{max}	3.000 rpm

3

OUTPUT SPINDLE

BENZ Solidfix®-S5

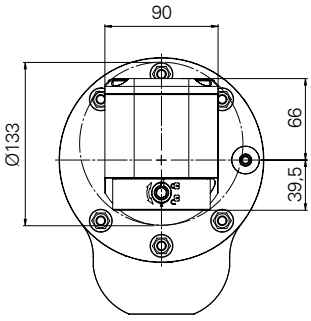

Collet chuck-ER50

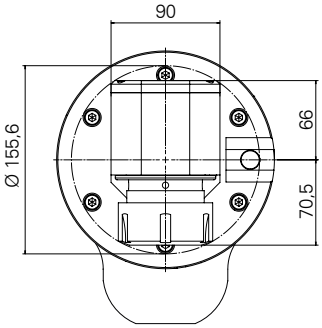

BENZ CAPTO™-C6

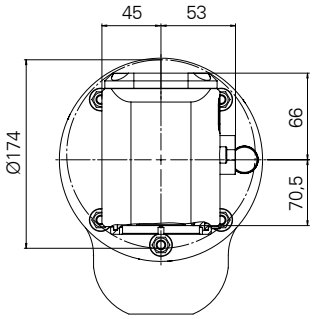

i technical data for other output spindles on request

FRONT HEAD

Type Size	Technical data L1 [mm]	L2 [mm]	KG
20	200	135,5	17,4
	237	172,5	16,7
	337	272,5	21,9

+OUTPUT SPINDLE

Type Size	Technical data L3 [mm]	+ KG
S5	45	0
ER50	45	0
C6	50	6

+TAPER

Type Size	Technical data L4 [mm]	+ KG
HSK-A100	55	0
Capto C8	45	-0,8
SK50 | CAT50	45	0,3
BT50	60	2,9

ANGLE HEAD
FORTE WWX (IC)

TECHNICAL DATA

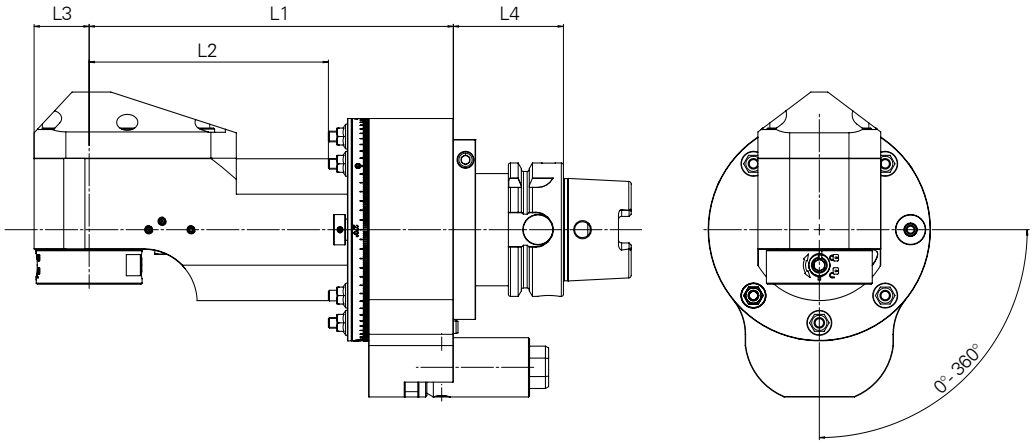

05

M_{max}	30 Nm
i	1:1
n_{max}	8.000 min^{-1}

*optional: MQL

OUTPUT SPINDLE

BENZ Solidfix®-S3

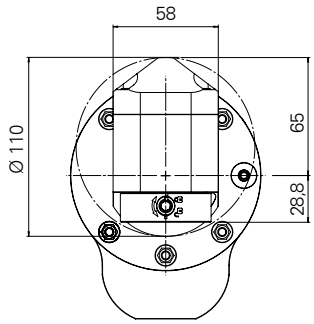

Collet chuck-ER 25A

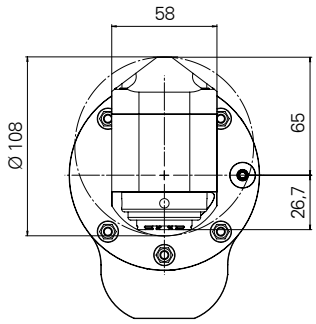

BENZ CAPTO™-C3

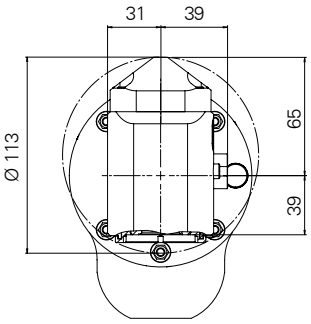

i technical data for other output spindles on request

FRONT HEAD

Type Size	Technical data L1 [mm]	L2 [mm]	KG
05	125	63,5	5,2
	172	110,5	5,9
	232	170,5	6,7

+OUTPUT SPINDLE

Type Size	Technical data L3 [mm]	+ KG
S3	26	0
ER25A	26	0
C3	30	0,6

+TAPER

Type Size	Technical data L4 [mm]	+ KG
HSK-A63	52	0
HSK-A100	55	1,7
Capto C6 | SK40 | CAT40	45	0,1
Capto C8	45	1
SK50 | CAT50	45	2,2
BT40	53	0,4
BT50	60	3,5

TECHNICAL DATA

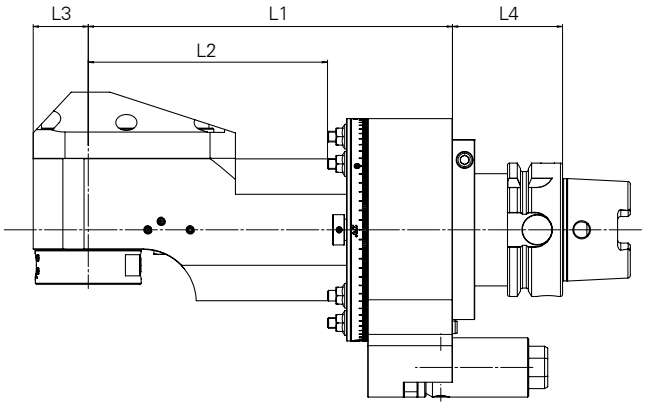

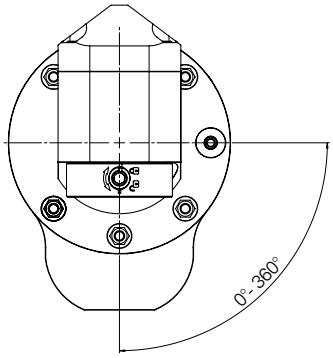

07

M_{max}	70 Nm
i	1:1
n_{max}	6.000 min^{-1}

*optional: MQL

4

OUTPUT SPINDLE

BENZ Solidfix®-S4

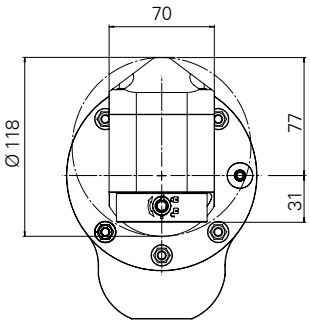

Collet chuck-ER32A

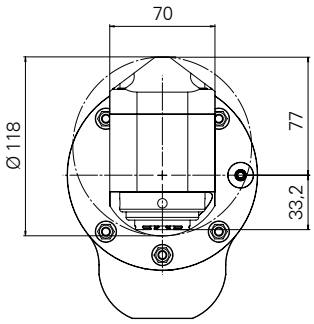

BENZ CAPTO™-C4

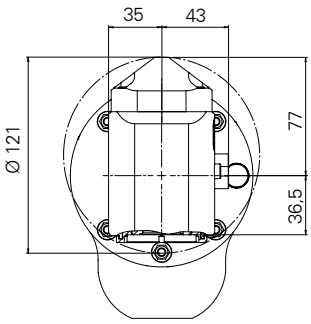

i technical data for other output spindles on request

FRONT HEAD

Type Size	Technical data L1 [mm]	L2 [mm]	KG
07	155	93,5	7,5
	200	138	8,7
	253	191,5	10

+OUTPUT SPINDLE

Type Size	Technical data L3 [mm]	+ KG
S4	35	0
ER32A	35	0
C4	35	0,5

+TAPER

Type Size	Technical data L4 [mm]	+ KG
HSK-A63	52	0
HSK-A100	55	1,9
Capto C6 | SK40 | CAT40	45	0,1
Capto C8	45	1
SK50 | CAT50	45	2,2
BT40	53	0,5
BT50	60	3,7

ANGLE HEAD
FORTE WWX (IC)

TECHNICAL DATA

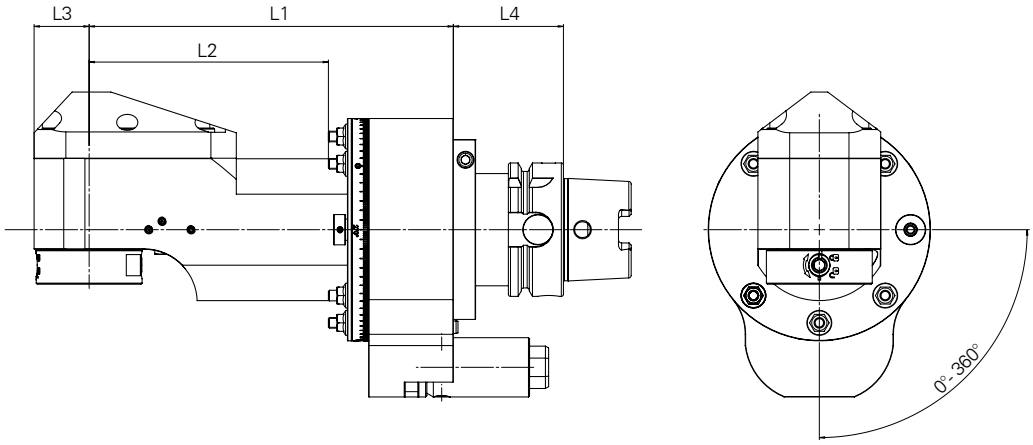

15

M_{max}	150 Nm
i	1:1
n_{max}	4.000 min^{-1}

OUTPUT SPINDLE

BENZ Solidfix®-S5

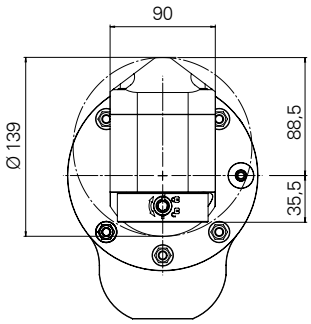

Collet chuck-ER 40A

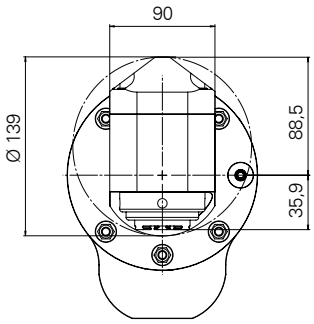

BENZ CAPTO™-C5

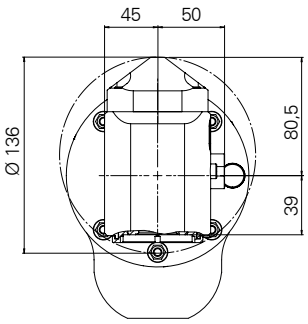

i technical data for other output spindles on request

FRONT HEAD

Type Size	Technical data L1 [mm]	L2 [mm]	KG
15	195	125,5	14,1
	232	161	16,3
	332	262,5	18,7

+OUTPUT SPINDLE

Type Size	Technical data L3 [mm]	+ KG
S5	40	0
ER40A	40	0
C5	42	0,5

+TAPER

Type Size	Technical data L4 [mm]	+ KG
HSK-A100	55	0
Capto C8	45	-0,8
SK50 | CAT50	45	0,3
BT50	60	1,8

TECHNICAL DATA

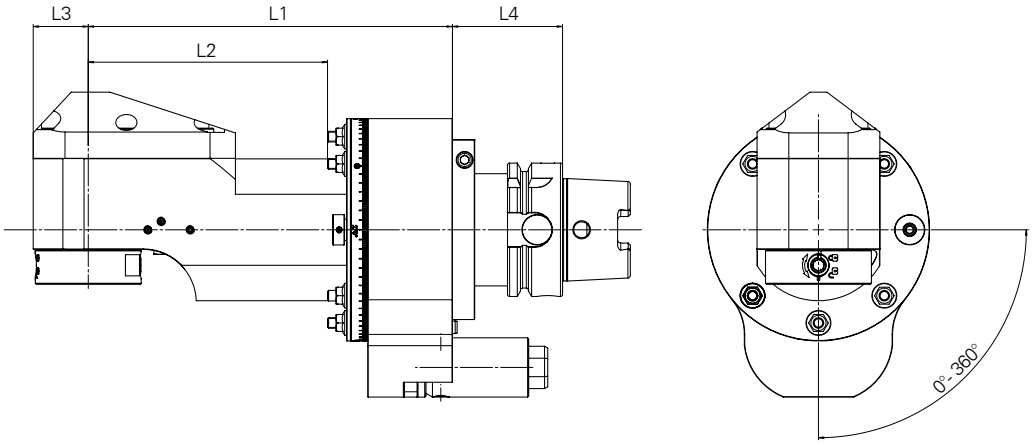

20

M_{max}	230 Nm
i	1:1
n_{max}	3.000 min^{-1}

4

OUTPUT SPINDLE

BENZ Solidfix®-S5

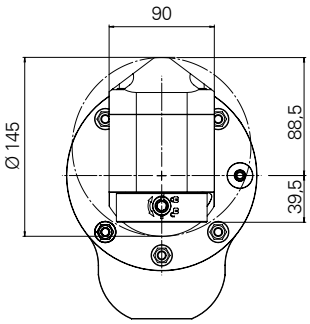

Collet chuck-ER 50

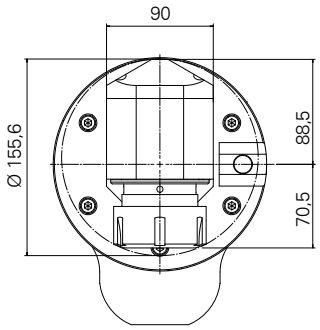

BENZ CAPTO™-C6

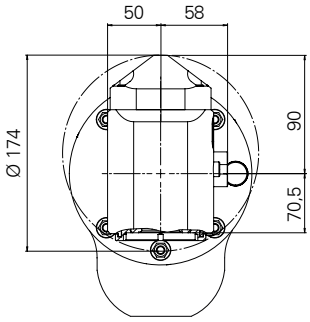

i technical data for other output spindles on request

FRONT HEAD

Type Size	Technical data L1 [mm]	L2 [mm]	KG
20	200	135,5	17,6
	237	172,5	18,6
	337	272,5	20,4

+OUTPUT SPINDLE

Type Size	Technical data L3 [mm]	+ KG
S5	45	0
ER50	45	0
C6	50	3,3

+TAPER

Type Size	Technical data L4 [mm]	+ KG
HSK-A100	55	0
Capto C8	45	-0,8
SK50 | CAT50	45	0,3
BT50	60	2,9

ANGLE HEAD
SLIM WGX

ANGLE HEAD 90° – NARROW DESIGN

Angle head for machining for spatial constraint / maximum useable tool length

Product version: external cooling (EC)

Feasible on request: internal cooling (IC) or EC/IC combination

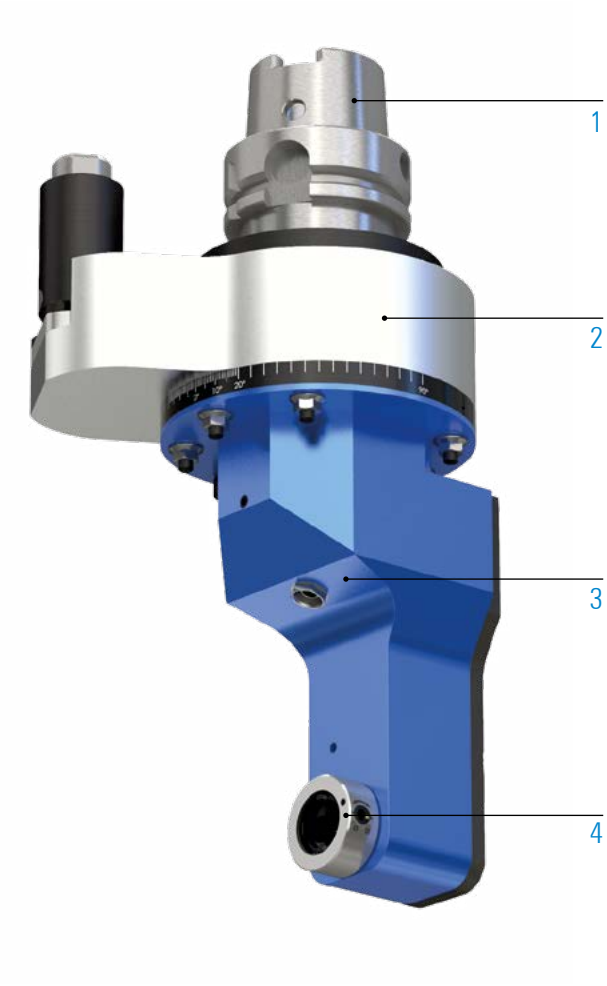

1 TAPER


HSK
DIN 69893


Steep taper
SK


Steep taper
MAS BT


Steep taper
CAT


Coromant
Capto®


KM™

2 TORQUE ARM

optional: customized torque arm
more information on page 25

3 FRONT HEAD (SIZE)

05 07

4 OUTPUT SPINDLE


BENZ
Solidfix®


Collet chuck

5

MACHINING

- drilling
- milling
- tapping

SPECIFICATIONS

- amount of output spindles
- axis angle
- change the angle head
- grease lubrication
- without cooling
- external cooling
- internal cooling (on request)
- exteral / internal cooling (on request)

ANGLE HEAD
SLIM WGX

TECHNICAL DATA

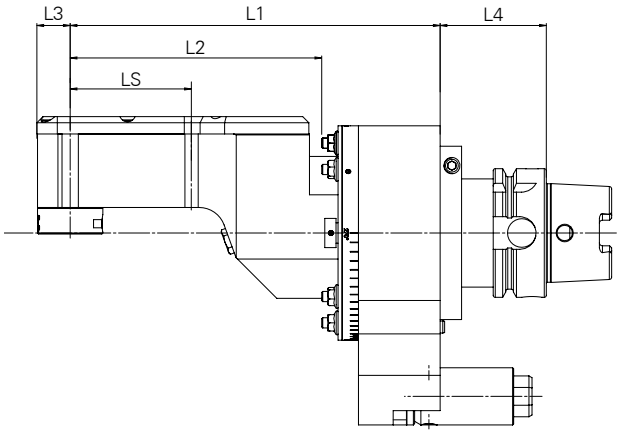

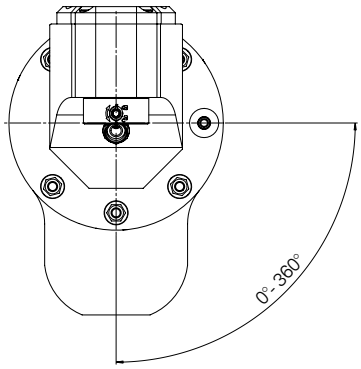

05

M_{max}	12 Nm
i	1:1,607
n^2_{max}	8.000 rpm

OUTPUT SPINDLE

BENZ Solidfix®-S1

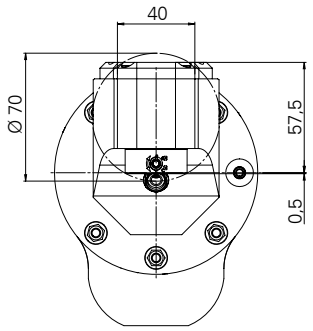

Collet chuck-ER 11A

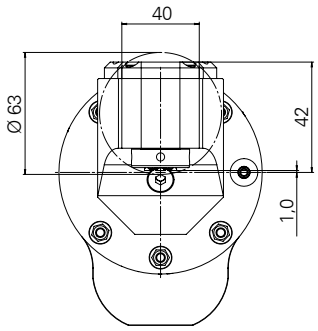

FRONT HEAD

Type Size	Technical data L1 [mm]	L2 [mm]	LS [mm]	KG
05 / L3=16	149	91	24	4,7
	181	123	56	4,9
	213	155	88	5,1

+OUTPUT SPINDLE

Type Size	Technical data L3 [mm]	+ KG
S1	16	0
ER11A	16	0

+TAPER

Type Size	Technical data L4 [mm]	+ KG
HSK-A63	52	0
HSK-A100	55	1,7
Capto C6 | SK40 | CAT40	45	0,1
Capto C8	45	1,0
SK50 | CAT50	45	2,2
BT40	53	0,4
BT50	60	3,5

TECHNICAL DATA

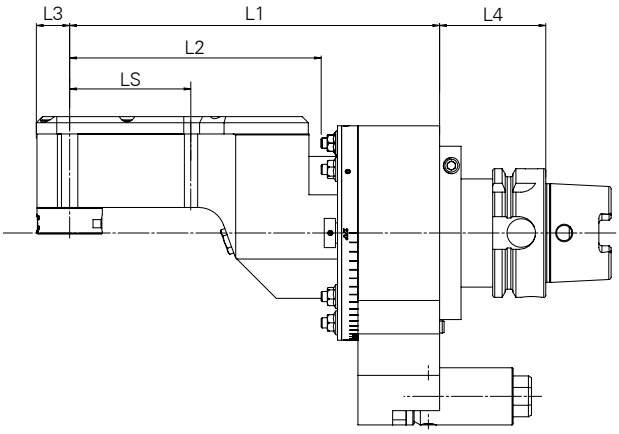

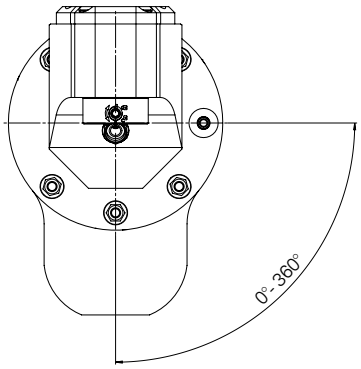

05

M_{max}	15 Nm
i	1:1,452
n^2_{max}	8.000 rpm

OUTPUT SPINDLE

BENZ Solidfix®-S1

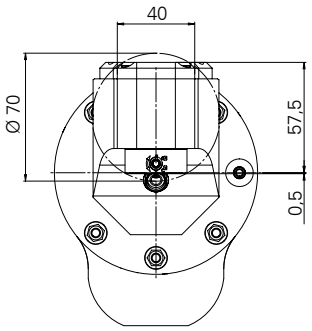

Collet chuck-ER 16A

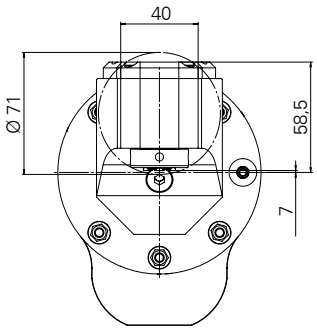

FRONT HEAD

Type Size	Technical data L1 [mm]	L2 [mm]	LS [mm]	KG
05 / L3=18	150	92,5	25,5	5
	182	124,5	57,5	5,2
	214	156,5	89,5	5,4

+OUTPUT SPINDLE

Type Size	Technical data L3 [mm]	+ KG
S1	18	0
ER16A	18	0

+TAPER

Type Size	Technical data L4 [mm]	+ KG
HSK-A63	52	0
HSK-A100	55	1,7
Capto C6 | SK40 | CAT40	45	0,1
Capto C8	45	1,0
SK50 | CAT50	45	2,2
BT40	53	0,4
BT50	60	3,5

ANGLE HEAD
SLIM WGX

TECHNICAL DATA

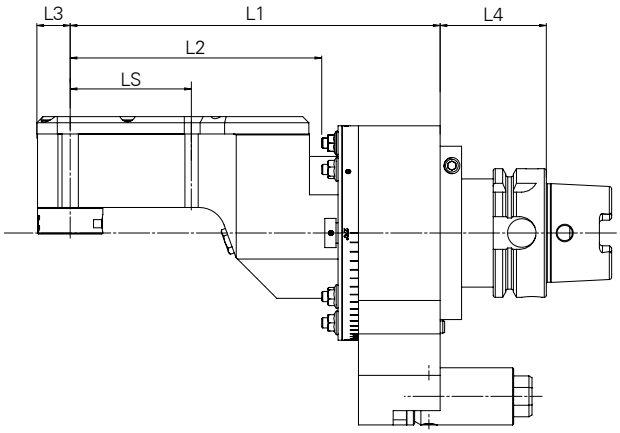

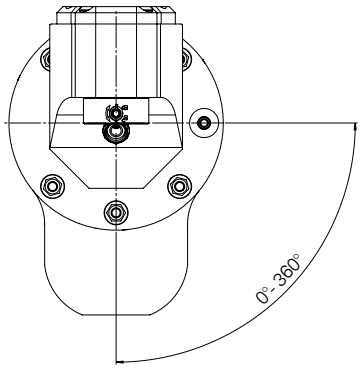

05

M_{max}	15 Nm
i	1:1
n_{max}	8.000 rpm

OUTPUT SPINDLE

BENZ Solidfix®-S2

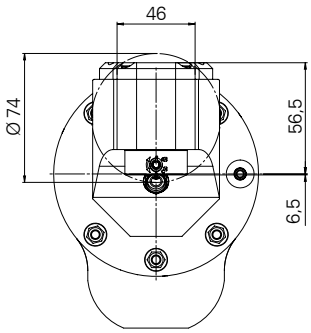

Collet chuck-ER20A

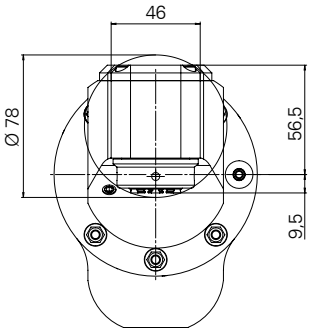

FRONT HEAD

Type Size	Technical data L1 [mm]	L2 [mm]	LS [mm]	KG
05 / L3=23	156	98	31	5,5
	188	130	63	5,6
	220	162	95	5,7

+OUTPUT SPINDLE

Type Size	Technical data L3 [mm]	+ KG
S2	23	0
ER20A	23	0

+TAPER

Type Size	Technical data L4 [mm]	+ KG
HSK-A63	52	0
HSK-A100	55	1,7
Capto C6 | SK40 | CAT40	45	0,1
Capto C8	45	1,0
SK50 | CAT50	45	2,2
BT40	53	0,4
BT50	60	3,5

TECHNICAL DATA

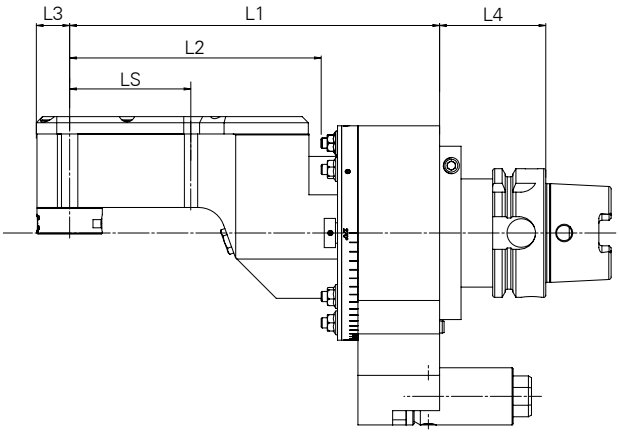

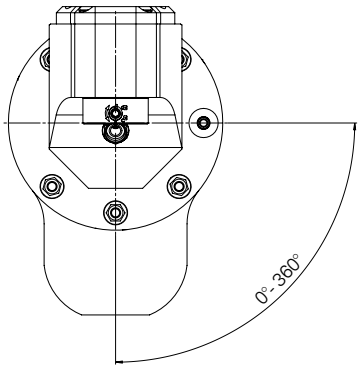

07

M_{max}	35 Nm
i	1:1
n_{max}	6.000 rpm

OUTPUT SPINDLE

BENZ Solidfix®-S3

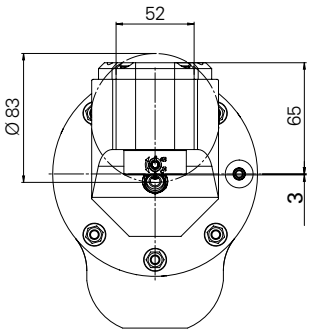

Collet chuck-ER25A

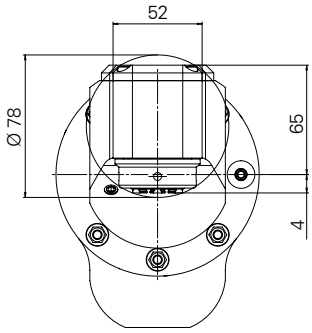

FRONT HEAD

Type Size	Technical data L1 [mm]	L2 [mm]	LS [mm]	KG
07 / L3=26	178	116	54	7,5
	215	153	85	7,9
	290	228	160	8

+OUTPUT SPINDLE

Type Size	Technical data L3 [mm]	+ KG
S3	26	0
ER25A	26	0

+TAPER

Type Size	Technical data L4 [mm]	+ KG
HSK-A63	52	0
HSK-A100	55	1,9
Capto C6 | SK40 | CAT40	45	0,1
Capto C8	45	1,0
SK50 | CAT50	45	2,2
BT40	53	0,5
BT50	60	3,5

ANGLE HEAD
SLIM WGX-S

ANGLE HEAD 90° – EXTREMLY NARROW DESIGN

Angle head for machining for extreme spatial constraint / maximum useable tool length

Product version: external cooling (EC)

Feasible on request: internal cooling (IC) or EC/IC combination

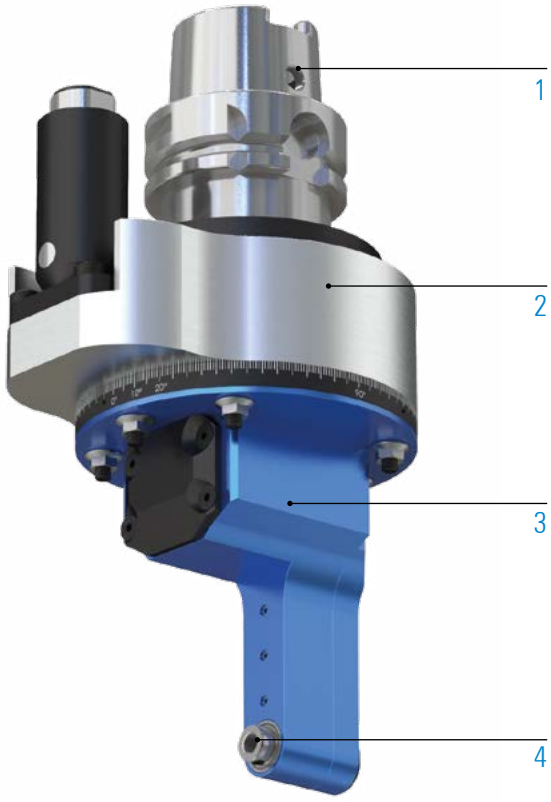

1 TAPER


HSK
DIN 69893


Steep taper
SK


Steep taper
MAS BT


Steep taper
CAT


Coromant
Capto®


KM™

2 TORQUE ARM

optional: customized torque arm
more information on page 25

3 FRONT HEAD (SIZE)

04 05

4 OUTPUT SPINDLE


Nann-
Collet chuck


Whistle
Notch

MACHINING

drilling

tapping

SPECIFICATIONS

1 amount of output spindles

90° axis angle

auto change the angle head

grease lubrication

without cooling

external cooling

internal cooling (on request)

exteral / internal cooling (on request)

ANGLE HEAD
SLIM WGX-S (WHISTLE NOTCH SIMILAR DIN1835-E)

TECHNICAL DATA

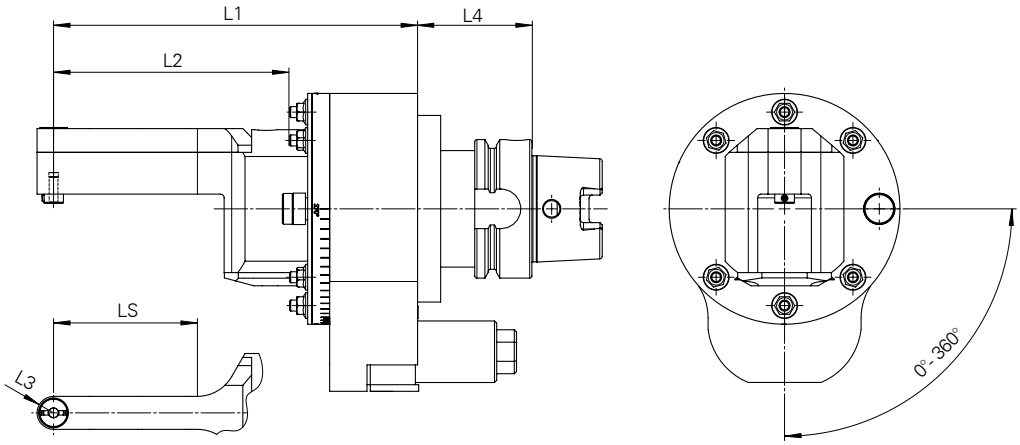

05

M_{max}	3 Nm
i	1:2,07
n^2_{max}	8.000 rpm

OUTPUT SPINDLE

WHISTLE-NOTCH Ø 4

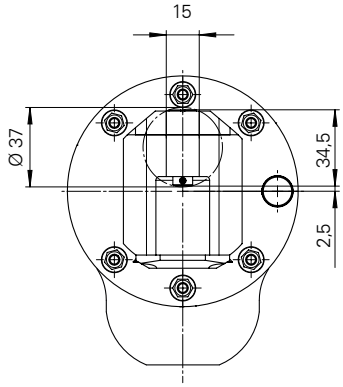

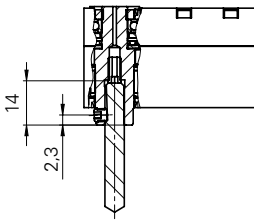

Whistle Notch Ø 4
shortened version

FRONT HEAD

Type Size	Technical data L1 [mm]	L2 [mm]	LS [mm]	KG
05 / L3=7,5	166	107	65	5,1

+OUTPUT SPINDLE

Type Size	Technical data L3 [mm]	+ KG
WNØ4/U1	7,5	0

+TAPER

Type Size	Technical data L4 [mm]	+ KG
HSK-A63	52	0
HSK-A100	55	1,7
Capto C6 | SK40 | CAT40	45	0,1
Capto C8	45	1,0
SK50 | CAT50	45	2,2
BT40	53	0,4
BT50	60	3,5

TECHNICAL DATA

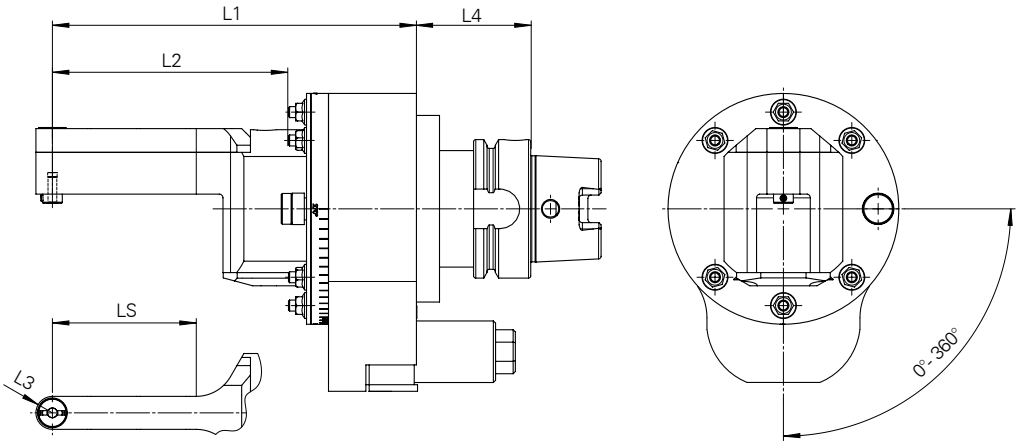

05

M_{max}	3 Nm
i	1:1,61
n^2_{max}	8.000 rpm

OUTPUT SPINDLE

WHISTLE-NOTCH Ø 6

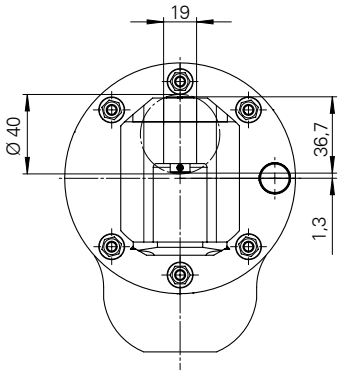

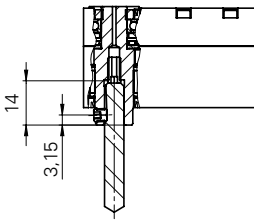

Whistle Notch Ø 6
shortened version

FRONT HEAD

Type Size	Technical data L1 [mm]	L2 [mm]	LS [mm]	KG
L3=9,5	172	113	73	5,2

+OUTPUT SPINDLE

Type Size	Technical data L3 [mm]	+ KG
WNØ6/U3	9,5	0

+TAPER

Type Size	Technical data L4 [mm]	+ KG
HSK-A63	52	0
HSK-A100	55	1,7
Capto C6 | SK40 | CAT40	45	0,1
Capto C8	45	1,0
SK50 | CAT50	45	2,2
BT40	53	0,4
BT50	60	3,5

ANGLE HEAD
SLIM WG-S (NANN COLLET CHUCK)

TECHNICAL DATA

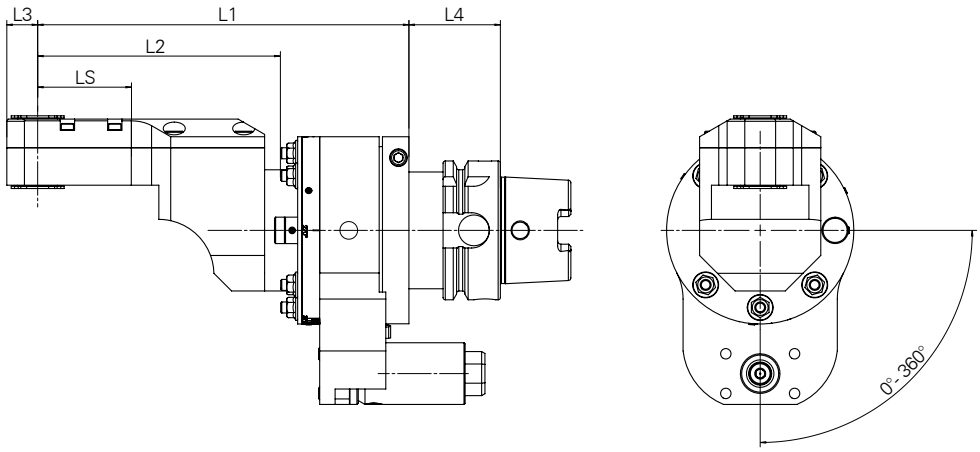

04

M_{max}	8 Nm
i	1:1,708
n^2_{max}	10.000 rpm

OUTPUT SPINDLE

NANN COLLET CHUCK
Clamping range 1-4 mm

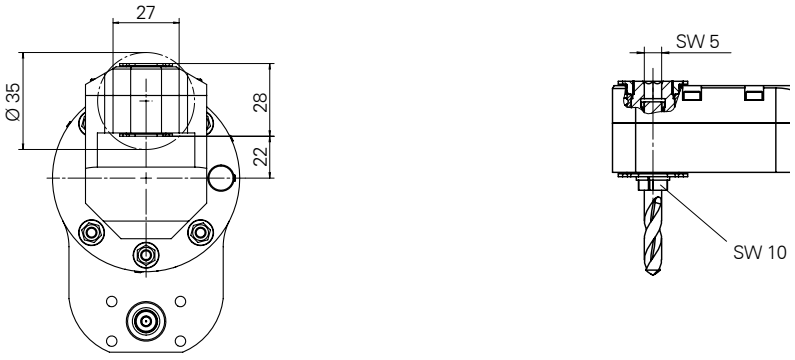

FRONT HEAD

Type Size	Technical data L1 [mm]	L2 [mm]	LS [mm]	KG
04 / L3=11,5	154	103	50	3,7
	199	148	95	3,8
	244	193	140	3,9

+OUTPUT SPINDLE

Type Size	Technical data L3 [mm]	+ KG
EE0-1-4 / 6043E*	11,5	0

* Collet-Ø available in 0,1mm steps

+TAPER

Type Size	Technical data L4 [mm]	+ KG
HSK-A63	52	0
HSK-A100	55	1,5
Capto C6 | SK40 | CAT40	45	0,1
Capto C8	45	0,9
SK50 | CAT50	45	2
BT40	53	0,4
BT50	60	3,3

TECHNICAL DATA

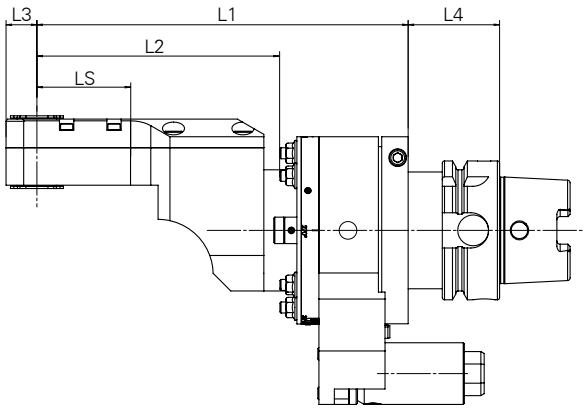

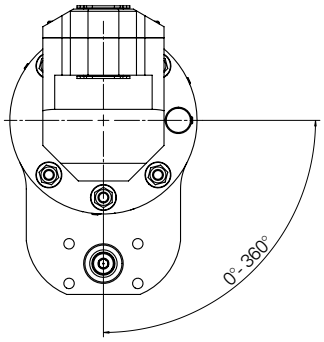

04

M_{max}	10 Nm
i	1:1,367
n^2_{max}	8.000 rpm

OUTPUT SPINDLE

NANN COLLET CHUCK
Clamping range 1-6 mm

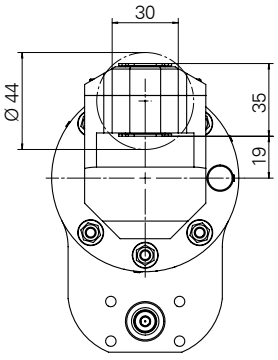

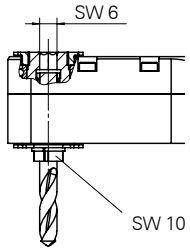

FRONT HEAD

Type Size	Technical data L1 [mm]	L2 [mm]	LS [mm]	KG
04 / L3=14	158	108	57	3,7
	205	153	103	3,8
	251	205	149	3,9

+OUTPUT SPINDLE

Type Size	Technical data L3 [mm]	+ KG
E00-1-6 / E603E-3*	14	0

* Collet-Ø available in 0,1mm steps

+TAPER

Type Size	Technical data L4 [mm]	+ KG
HSK-A63	52	0
HSK-A100	55	1,5
Capto C6 | SK40 | CAT40	45	0,1
Capto C8	45	0,9
SK50 | CAT50	45	2
BT40	53	0,4
BT50	60	3,3

ANGLE HEAD
SLIM WGX-S (SCREW-IN CUTTING TOOL)

TECHNICAL DATA

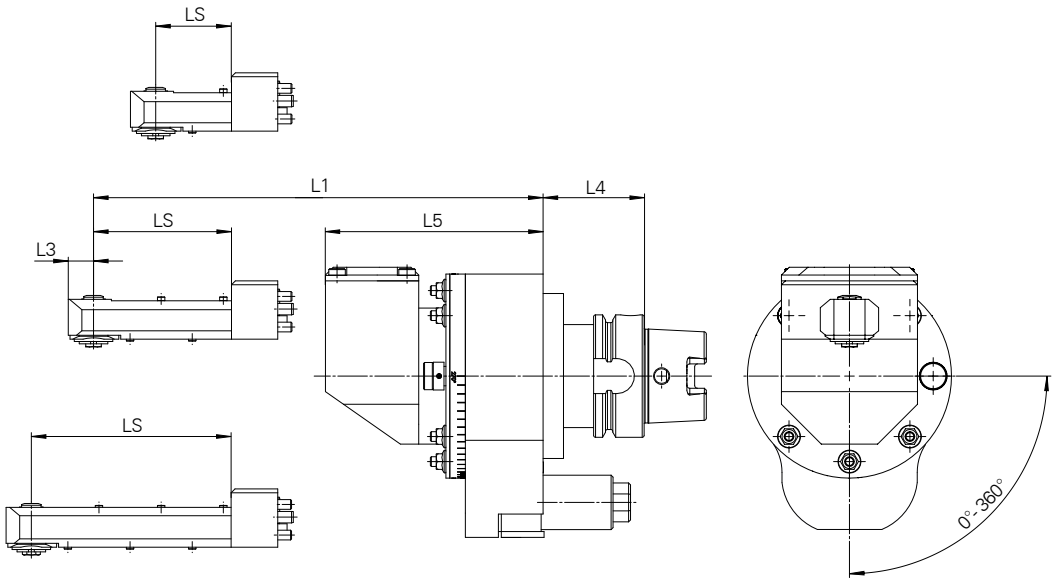

05

M_{max}	3 Nm
i	1:2,38
n^2_{max}	8.000 rpm

OUTPUT SPINDLE

Special admission

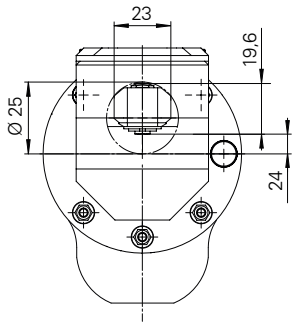

Tool fitting dimensions

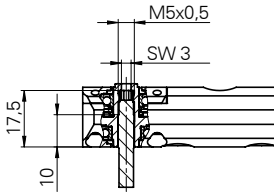

FRONT HEAD

Type Size	Technical data L1 [mm]	LS [mm]	L5 [mm]	KG
05 / Ø=25	167	31	112	6,4
	193	57	112	6,5
	232	96	112	6,6

+OUTPUT SPINDLE

Type Size	Technical data L3 [mm]	+ KG
Ø=5	12,5	0

+TAPER

Type Size	Technical data L4 [mm]	+ KG
HSK-A63	52	0
HSK-A100	55	1,7
Capto C6 | SK40 | CAT40	45	0,1
Capto C8	45	1,0
SK50 | CAT50	45	2,2
BT40	53	0,4
BT50	60	3,5

TECHNICAL DATA

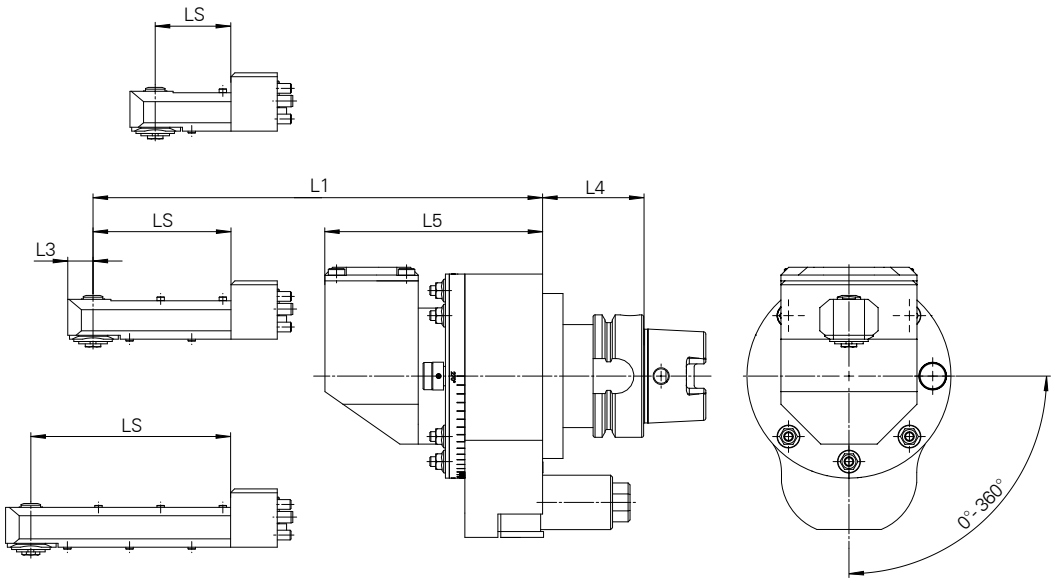

05

M_{max}	3 Nm
i	1:2,19
n^2_{max}	8.000 rpm

OUTPUT SPINDLE

Special admission

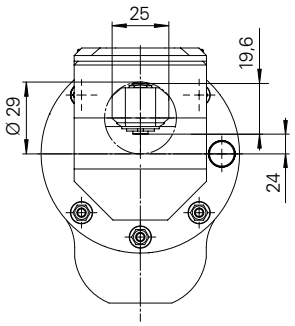

Tool fitting dimensions

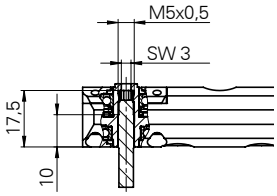

FRONT HEAD

Type Size	Technical data L1 [mm]	LS [mm]	L5 [mm]	KG
05 / Ø=29	168	32	112	6,4
	207	71	112	6,5
	233	97	112	6,6

+OUTPUT SPINDLE

Type Size	Technical data L3 [mm]	+ KG
Ø=5	13,5	0

+TAPER

Type Size	Technical data L4 [mm]	+ KG
HSK-A63	52	0
HSK-A100	55	1,7
Capto C6 | SK40 | CAT40	45	0,1
Capto C8	45	1,0
SK50 | CAT50	45	2,2
BT40	53	0,4
BT50	60	3,5

ANGLE HEAD
SLIM WGX-S (SCREW-IN CUTTING TOOL)

TECHNICAL DATA

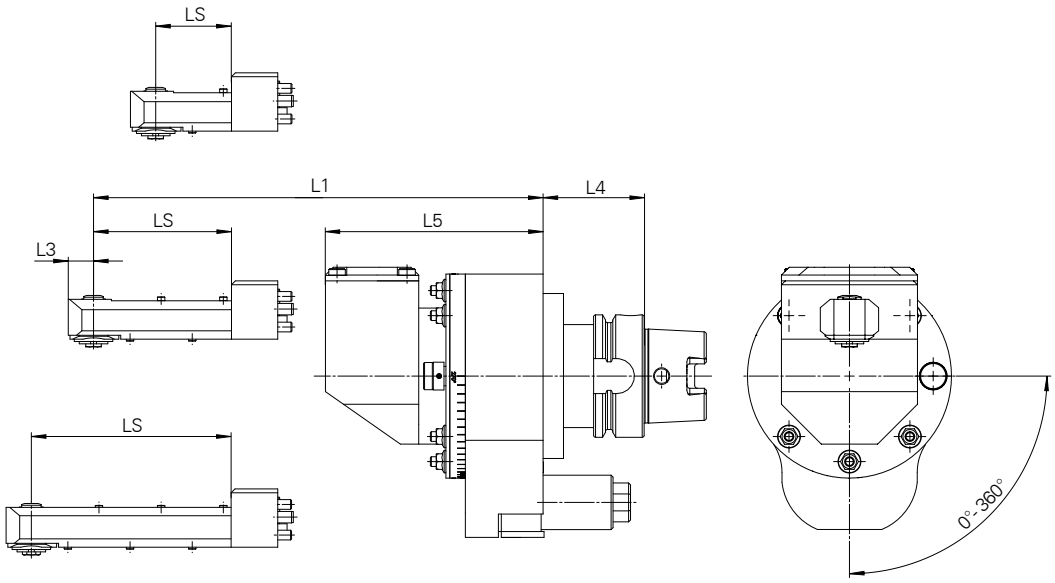

05

M_{max}	5 Nm
i	1:2,273
n^2_{max}	8.000 rpm

OUTPUT SPINDLE

Special admission

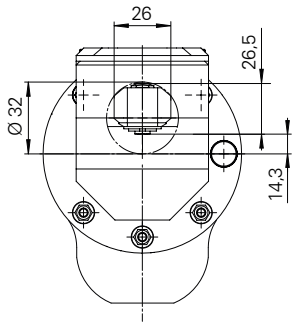

Tool fitting dimensions

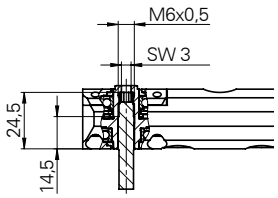

FRONT HEAD

Type Size	Technical data L1 [mm]	LS [mm]	L5 [mm]	KG
05 / Ø=32	173	37	112	3,8
	205	69	112	4
	231	95	112	1,2

+OUTPUT SPINDLE

Type Size	Technical data L3 [mm]	+ KG
Ø=6	12	0

+TAPER

Type Size	Technical data L4 [mm]	+ KG
HSK-A63	52	0
HSK-A100	55	1,7
Capto C6 | SK40 | CAT40	45	0,1
Capto C8	45	1,0
SK50 | CAT50	45	2,2
BT40	53	0,4
BT50	60	3,5

TECHNICAL DATA

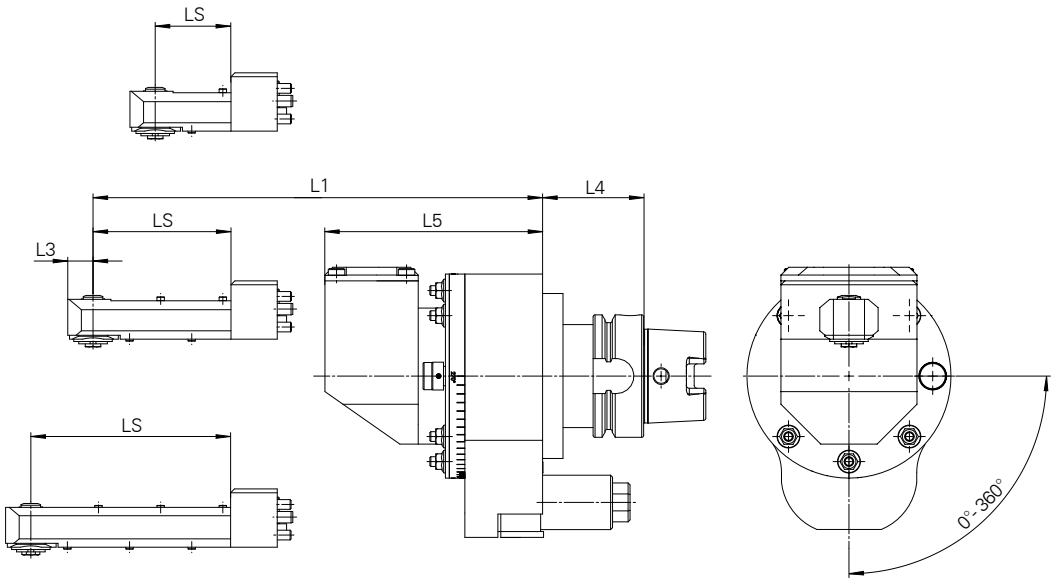

05

M_{max}	5 Nm
i	1:1,185
n^2_{max}	8.000 rpm

OUTPUT SPINDLE

Special admission

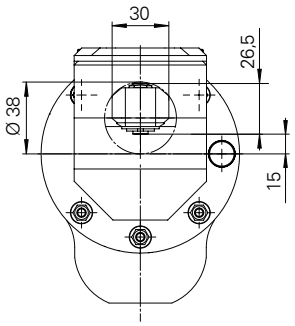

Tool fitting dimensions

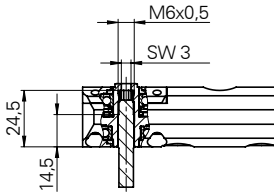

FRONT HEAD

Type Size	Technical data L1 [mm]	LS [mm]	L5 [mm]	KG
05 / Ø=38	175	39	112	6,5
	207	71	112	6,6
	239	103	112	6,8

+OUTPUT SPINDLE

Type Size	Technical data L3 [mm]	+ KG
Ø=6	13	0

+TAPER

Type Size	Technical data L4 [mm]	+ KG
HSK-A63	52	0
HSK-A100	55	1,7
Capto C6 | SK40 | CAT40	45	0,1
Capto C8	45	1,0
SK50 | CAT50	45	2,2
BT40	53	0,4
BT50	60	3,5

ANGLE HEAD
FLEX WDX

ANGLE HEAD 0-100° – WITH FLEXIBLE ANGLE / STEPLESS ADJUSTMENT

Angle head for machining in any variable position

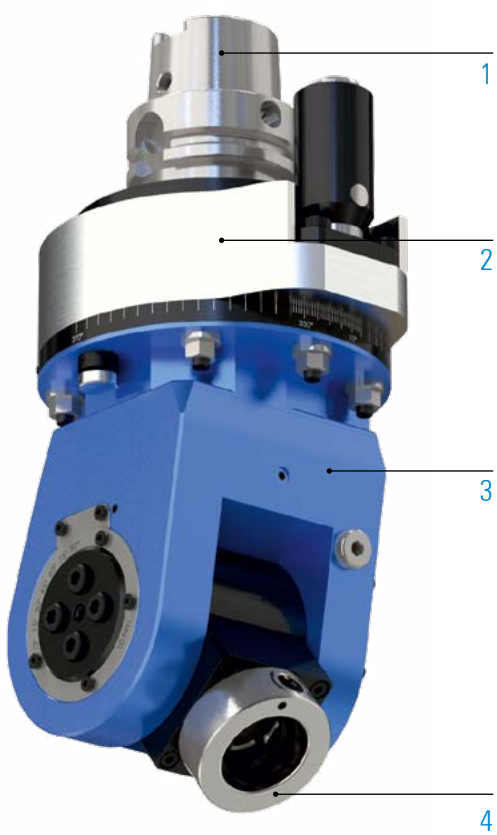

1 TAPER


HSK
DIN 69893


Steep taper
SK


Steep taper
MAS BT


Steep taper
CAT


Coromant
Capto®


KM™

2 TORQUE ARM

optional: customized torque arm
more information on page 25

3 FRONT HEAD (SIZE)

05 07 15

4 OUTPUT SPINDLE


BENZ
Solidfix®


Collet chuck


Weldon


Whistle
Notch


Milling arbor


HSK


KM™

MACHINING

- drilling
- tapping

SPECIFICATIONS

- amount of output spindles
- axis angle
- change the angle head
- grease lubrication
- without cooling
- external cooling
- internal cooling

ANGLE HEAD
FLEX WDX

TECHNICAL DATA

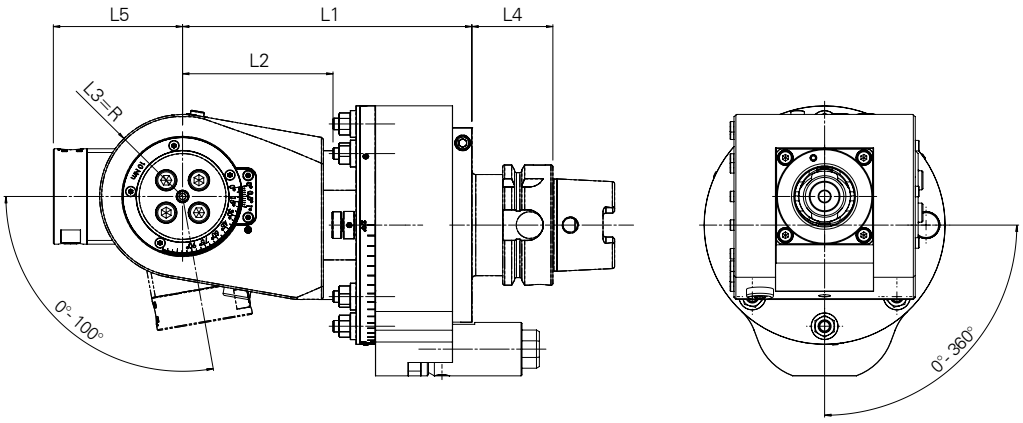

05

M_{max}	20 Nm
i	1:1
n_{max}	8.000 rpm

OUTPUT SPINDLE – 90° SWIVELED

BENZ Solidfix®-S2

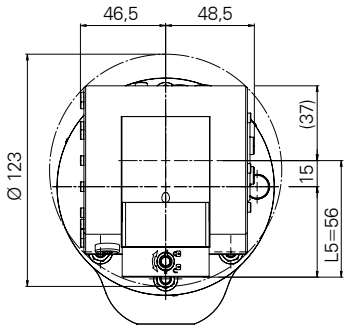

Collet chuck-ER20A

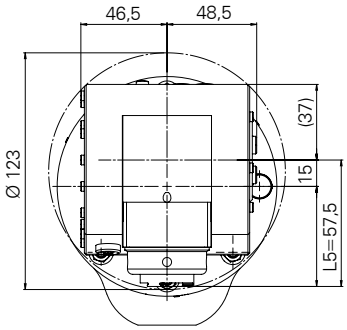

i technical data for other output spindles on request

FRONT HEAD

Type Size	Technical data L1 [mm]	L2 [mm]	KG
05	130	68,5	6,6

+OUTPUT SPINDLE

Type Size	Technical data L3 [mm]	L5 [mm]	KG
S2	37	56	0
ER20A	37	57,5	0

+TAPER

Type Size	Technical data L4 [mm]	+ KG
HSK-A63	52	0
HSK-A100	55	1,7
Capto C6 | SK40 | CAT40	45	0,1
Capto C8	45	1
SK50 | CAT50	45	2,2
BT40	53	0,4
BT50	60	3,5

TECHNICAL DATA

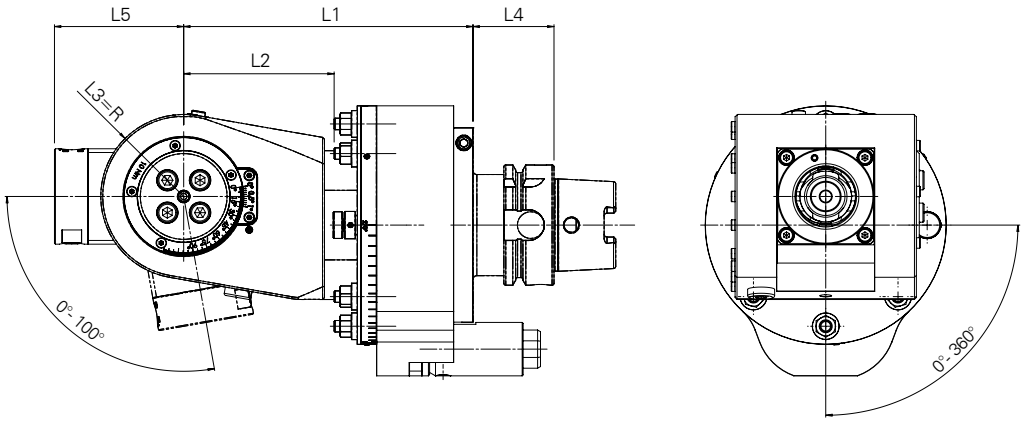

07

M_{max}	50 Nm
i	1:1
n_{max}	6.000 min^{-1}

OUTPUT SPINDLE – 90° SWIVELED

BENZ Solidfix®-S3

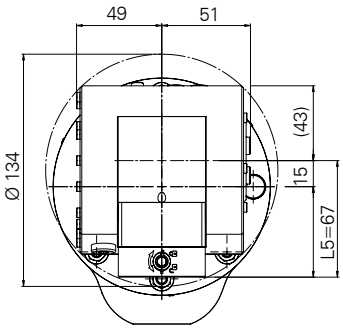

Collet chuck-ER25A

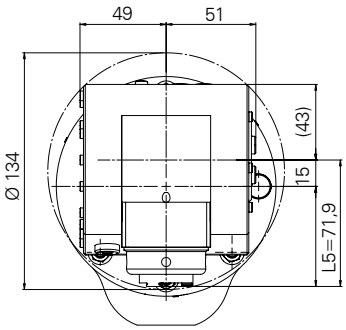

i technical data for other output spindles on request

FRONT HEAD

Type Size	Technical data L1 [mm]	L2 [mm]	KG
07	140	77,5	8,9

+OUTPUT SPINDLE

Type Size	Technical data L3 [mm]	L5 [mm]	KG
S3	43	67	0
ER25A	43	71,9	0

+TAPER

Type Size	Technical data L4 [mm]	+ KG
HSK-A63	52	0
HSK-A100	55	1,9
Capto C6 | SK40 | CAT40	45	0,1
Capto C8	45	1
SK50 | CAT50	45	2,2
BT40	53	0,5
BT50	60	1,8

ANGLE HEAD
FLEX WDX

TECHNICAL DATA

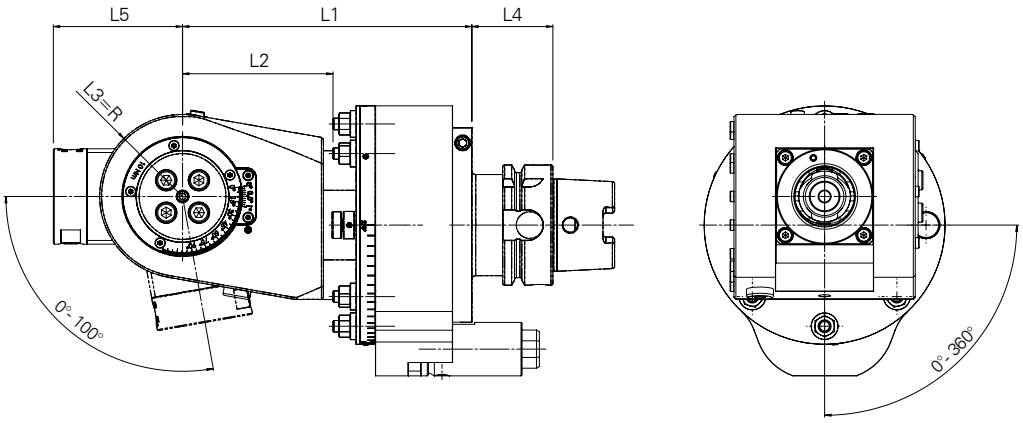

15

M_{max}	90 Nm
i	1:1
n_{max}	4.000 rpm

OUTPUT SPINDLE – 90° SWIVELED

BENZ Solidfix®-S4

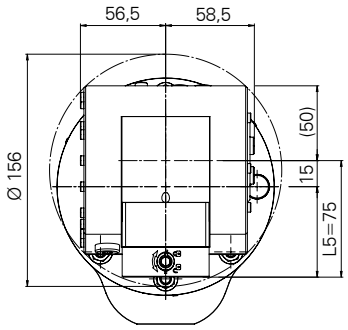

Collet chuck-ER32A

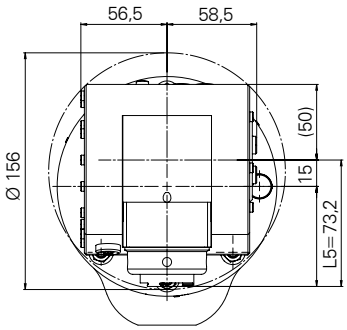

i technical data for other output spindles on request

FRONT HEAD

Type Size	Technical data L1 [mm]	L2 [mm]	KG
15	180	109	15,5

+OUTPUT SPINDLE

Type Size	Technical data L3 [mm]	L5 [mm]	KG
S4	50	75	0
ER32A	50	73,2	0

+TAPER

Type Size	Technical data L4 [mm]	+ KG
HSK-A100	55	0
Capto C8	45	-0,8
SK50 | CAT50	45	0,3
BT50	60	1,8

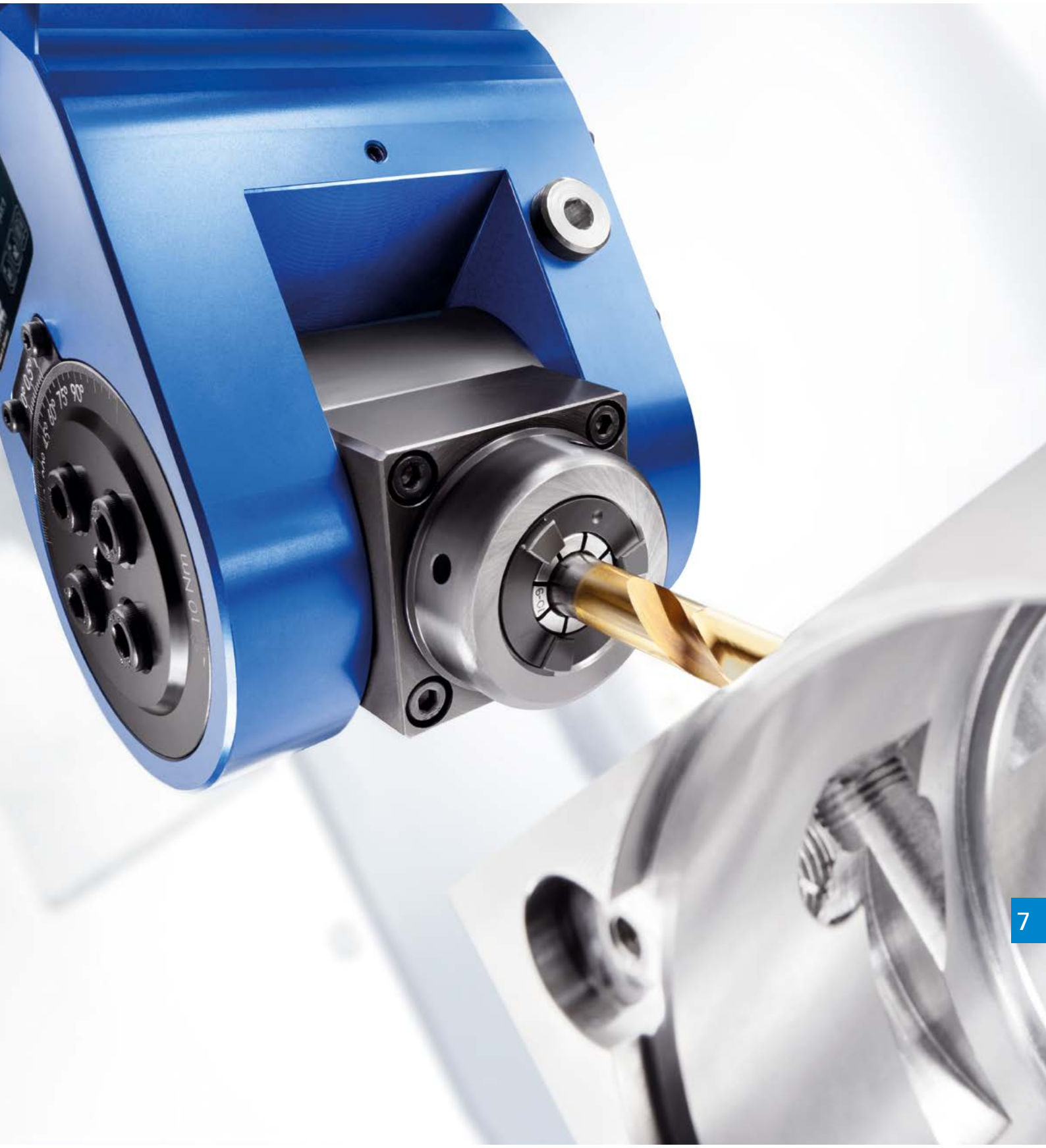

ANGLE HEAD
FIX WFX

ANGLE HEAD ≠ 90° – WITH FIXED ANGLE

Angle head for special machining with fixed angle

All dimensions and weights depend on the machining angle selected.

Precise data is only available on request.

GET IN TOUCH

PERFORMANCE DATA

05	07	15	20
M_{max} 30 Nm	M_{max} 70 Nm	M_{max} 150 Nm	M_{max} 230 Nm
i 1:1	i 1:1	i 1:1	i 1:1
n_{max} 8.000 rpm	n_{max} 6.000 rpm	n_{max} 4.000 rpm	n_{max} 3.000 rpm
OUTPUT SPINDLE	OUTPUT SPINDLE	OUTPUT SPINDLE	OUTPUT SPINDLE
S3 | ER25A	S4 | ER32A	S5 | ER40A	S5 | ER40A

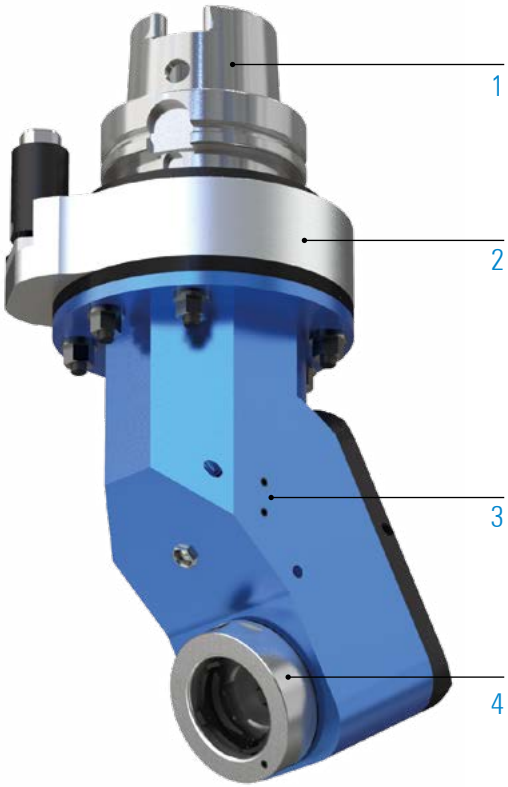

1 TAPER


HSK
DIN 69893


Steep taper
SK


Steep taper
MAS BT


Steep taper
CAT


Coromant
Capto®


KM™

2 TORQUE ARM

optional: customized torque arm
more information on page 25

3 FRONT HEAD (SIZE)

05 | 07 | 15 | 20

4 OUTPUT SPINDLE


BENZ
Solidfix®


BENZ
CAPTO™


Collet chuck


Weldon


Whistle
Notch


Milling arbor


HSK


KM™

MACHINING

- drilling
- milling
- tapping

SPECIFICATIONS

- amount of output spindles
- axis angle
- change the angle head
- grease lubrication
- without cooling
- external cooling
- internal cooling
- exteral / internal cooling

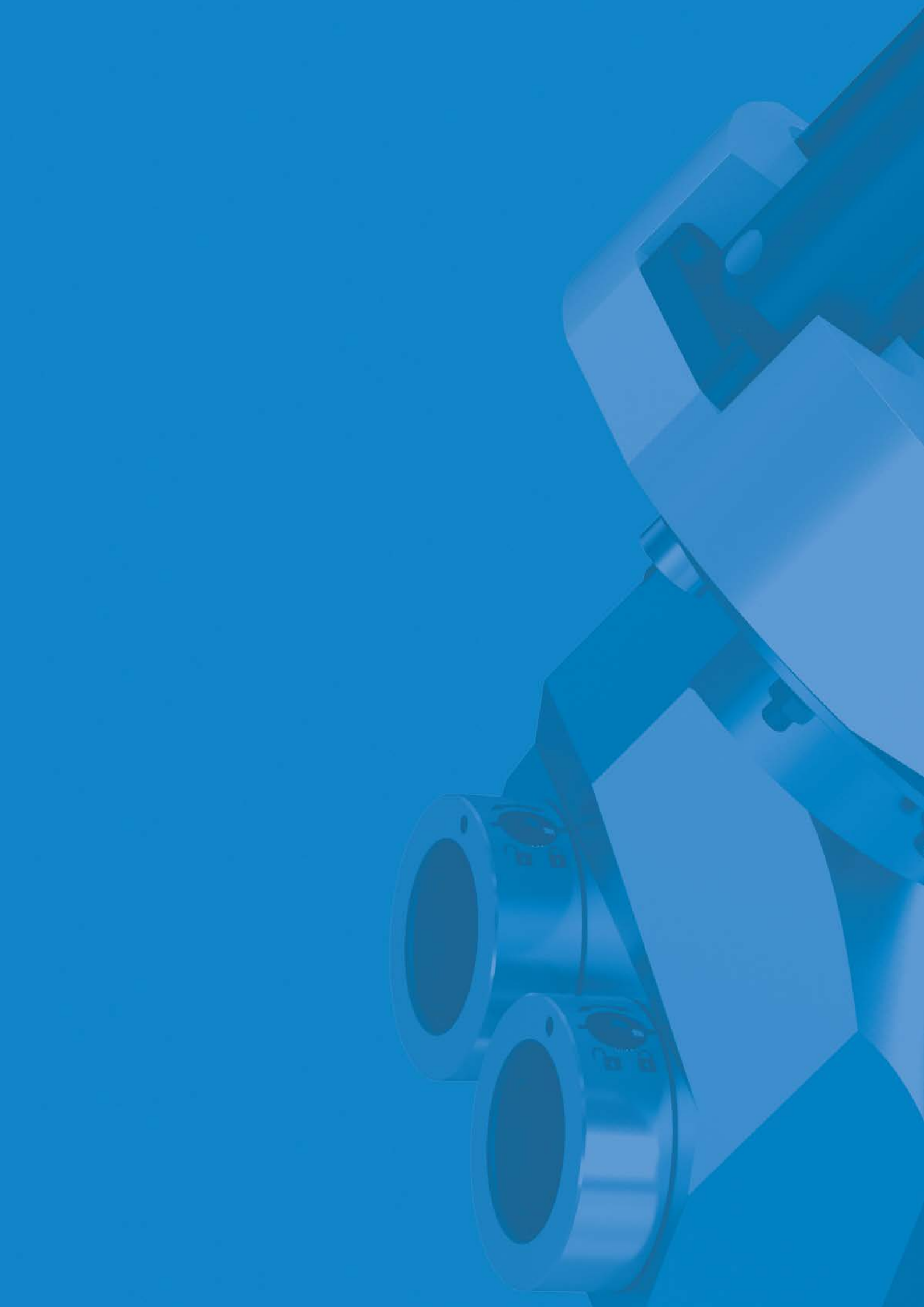



UNIQUE SOLUTIONS



ELECTRIC MOBILITY
DRIVING THE FUTURE

The industry of the future

Electric mobility is enjoying high growth rates as it combines sustainability aspects with the need for mobility.

In the last decade, the number of electric cars sold worldwide has increased more than tenfold – from 0.8 million units in 2010 to 9.3 million units in 2021.

(Source: Fraunhofer Battery Update 7.12.22)

A continuing trend that, in addition to the e-mobility industry, is also having a significant impact on many suppliers.

In particular, our angle heads with minimum quantity lubrication are frequently used in the field of electromobility. More information about MQL you can find on page 27.

PROCESSING OF BATTERY TANK

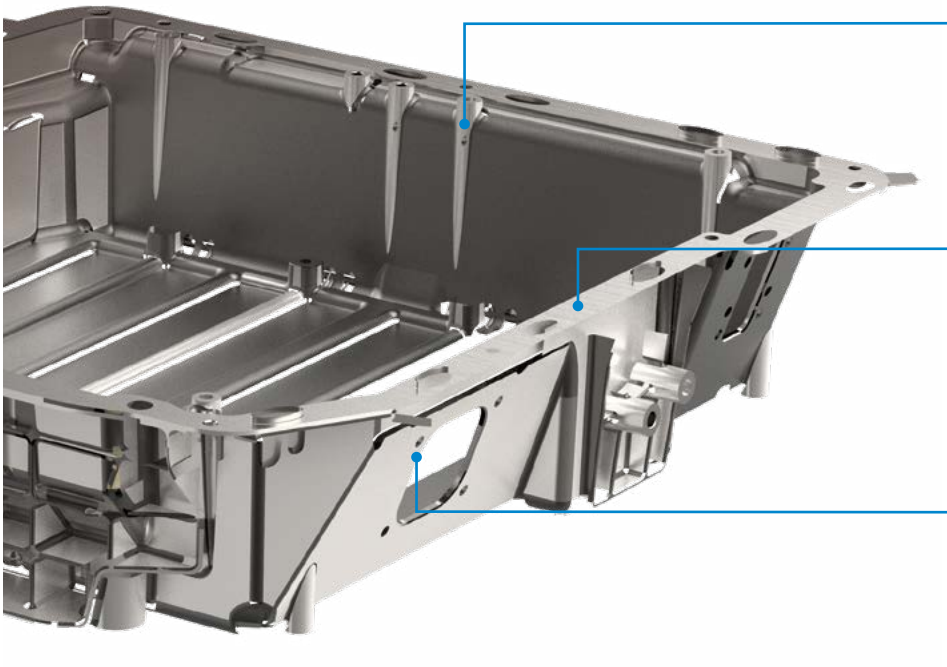

UNITS IN APPLICATION

1



2



3



MORE SPECIAL SOLUTIONS





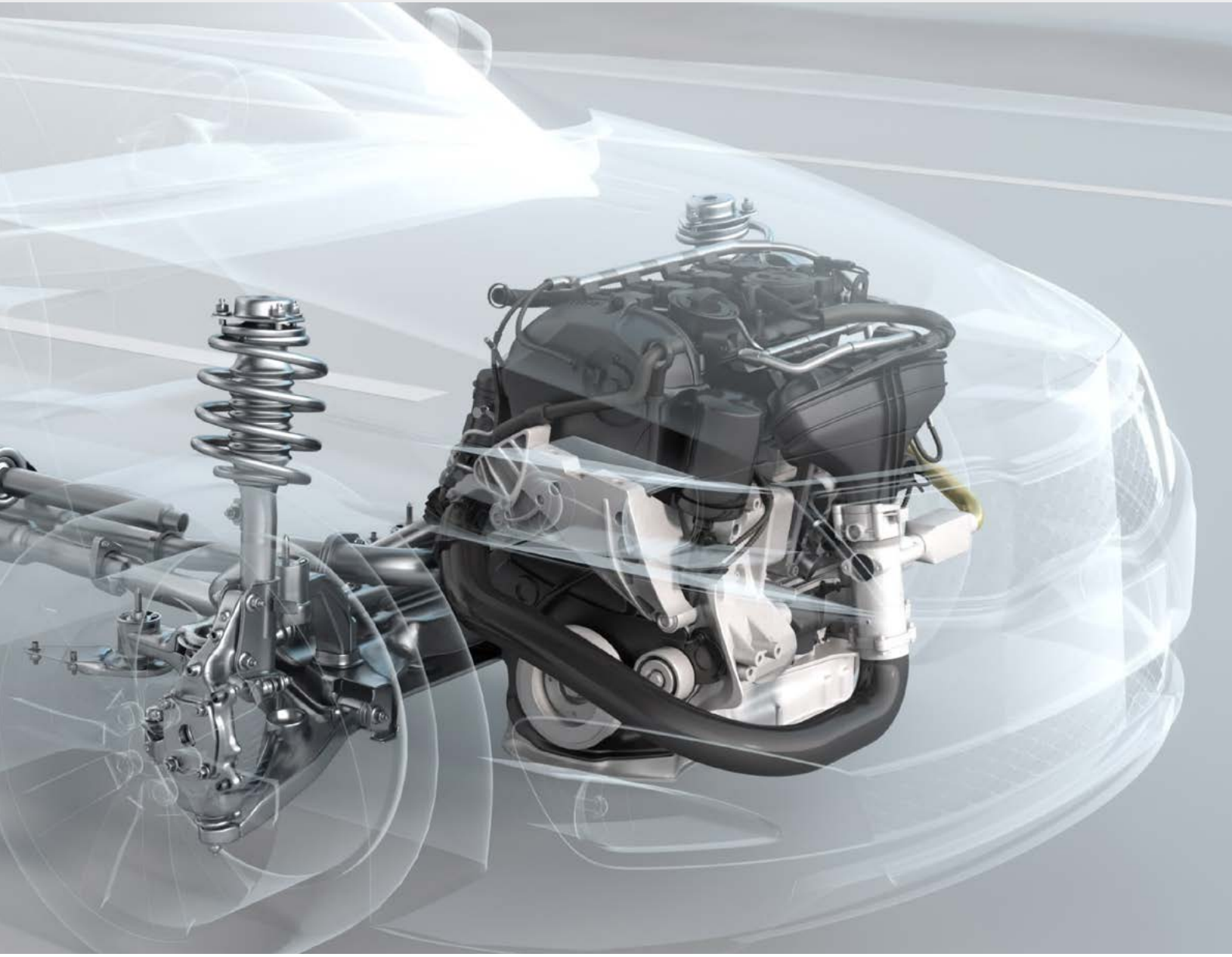

AUTOMOTIVE: TECHNICAL SOLUTIONS AT THE HIGHEST LEVEL

Innovative technologies on the cutting edge of what is possible

For the machining of components in the automotive industry, BENZ Tooling offers technical solutions at the highest level! You benefit from the ambition of our engineering team, because technical innovation is ingrained into our very identity.

BENZ units create an essential competitive edge.

They are not only designed for high quantities in series production, but also shorten the machining cycle for each component.

PROCESSING OF ENGINE BLOCK

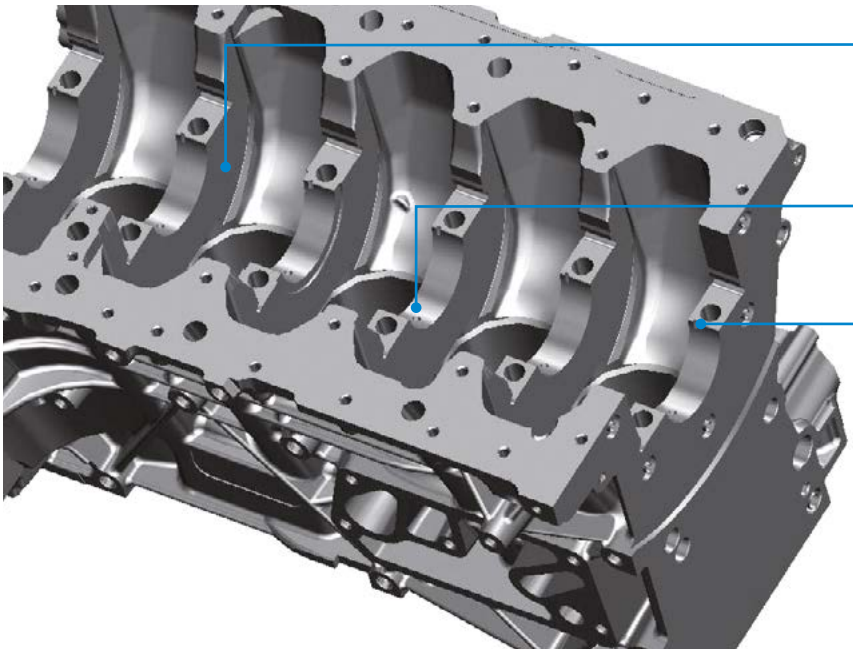

1 side plate milling

2 oil hole drilling

3 retaining slot milling

UNITS IN APPLICATION

1



2



3



MORE SPECIAL SOLUTIONS

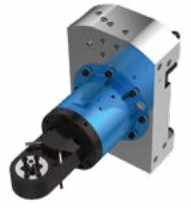







BRAKE CALIPERS
MACHINING IN SMALLEST SPACES

Highest precision in the tightest space...

... is the greatest challenge in the production of brake calipers – both in the area of passenger and commercial vehicles as well as motorcycles.

Especially modern models of high-performance vehicles with electronic brake systems can be very complex to machine.

With BENZ angle heads you are perfectly prepared for these challenges.

We offer the right solution for machining almost all functional surfaces. Additionally, you will not only achieve a clean and precise result, but also an economical one.

PROCESSING OF BRAKE CALIPER

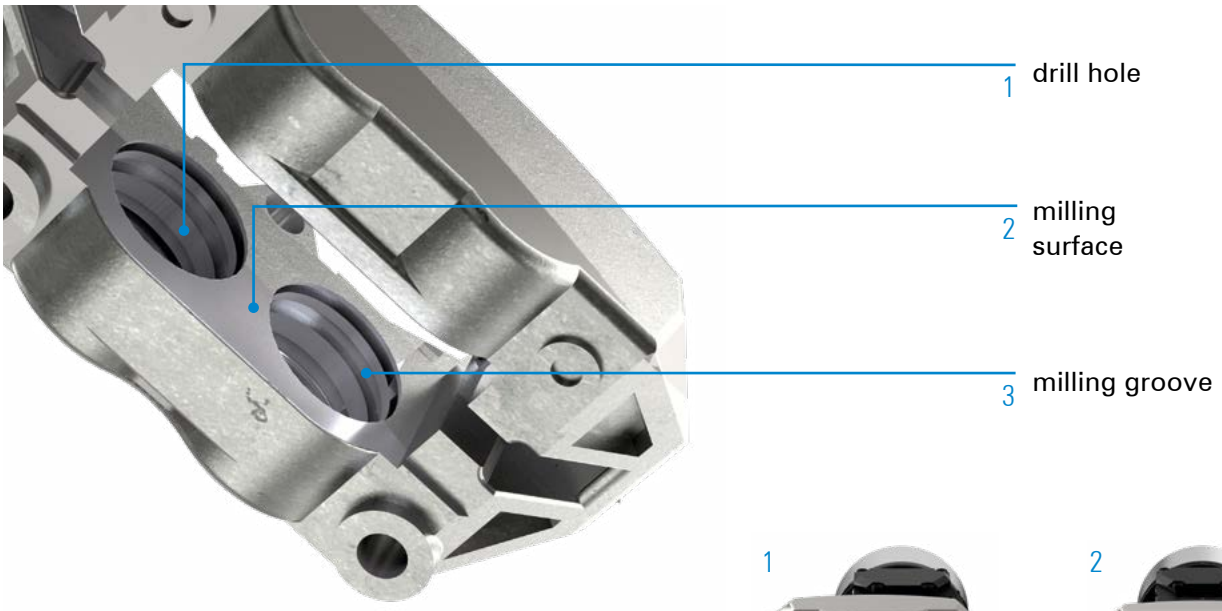

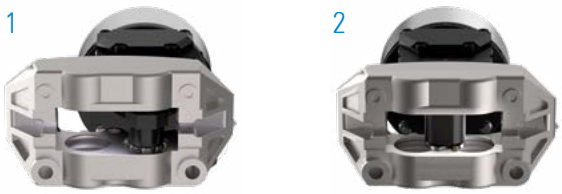

Illustration: Motorcycle brake caliper with external dimensions in mm – W 155 x H 83 x D 67

UNITS IN APPLICATION

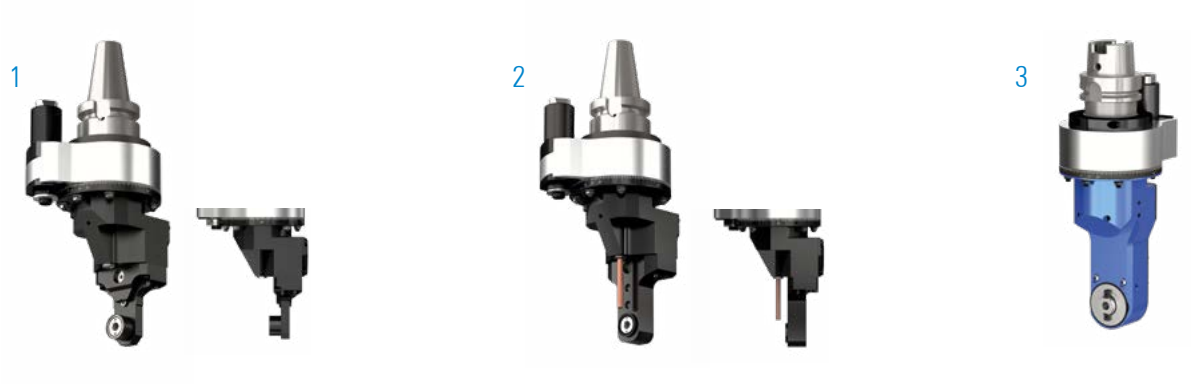

MORE SPECIAL SOLUTIONS





BENZ ANGLE HEADS FOR MACHINING IN THE AEROSPACE INDUSTRY

SOARING FLIGHTS IN AEROSPACE TECHNOLOGY

Precision, reliability, lightweight.

The aerospace industry demands extreme precision and reliability from technology and materials. In aircraft construction and in the production of aerospace components, there is one crucial thing above all: lightness.

For this reason, aluminum and composites are used particularly frequently in this industry. BENZ Tooling offers various solutions for processing highly complex components in the aerospace industry.

PROCESSING OF TURBINE HOUSINGS



1 internal hole drilling

2 connection hole drilling

3 flange hole drilling

UNITS IN APPLICATION

1



2



3



MORE SPECIAL SOLUTIONS



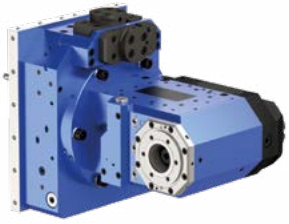





WIND POWER
FOR ENVIRONMENTAL CONTRIBUTION

Robust precision for wind turbines

Wind turbines have to meet extraordinary requirements in terms of statics and durability of the individual components.

Despite their robust construction, the manufacturing of wind turbines is real precision work.

Many classic metalworking operations such as milling, drilling and tapping come into play here.

BENZ exchangable units guarantee high time savings and a low error rate in your individual production processes.

PROCESSING OF ROTOR HUB

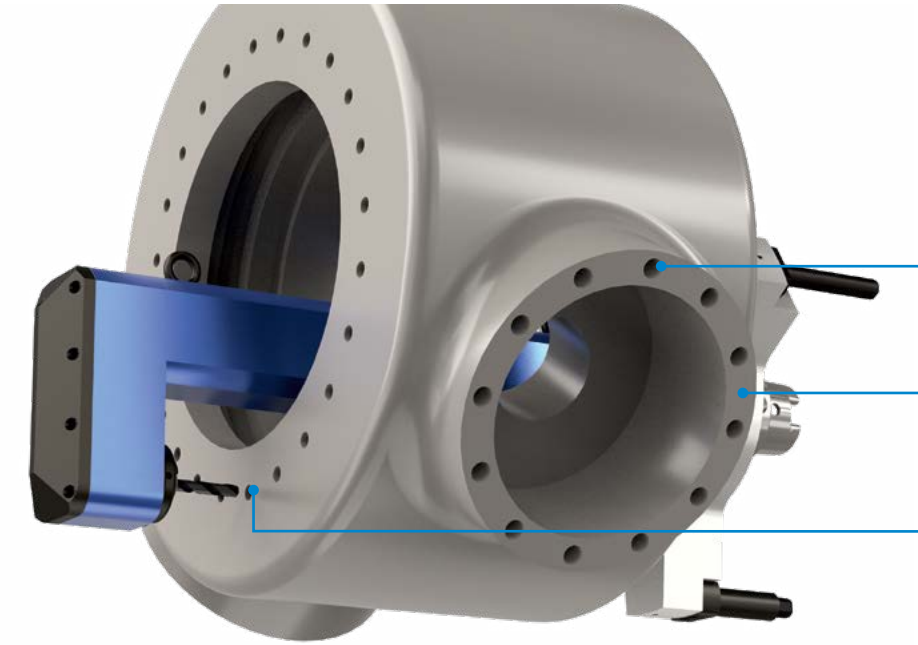

UNITS IN APPLICATION

1



2



3



MORE SPECIAL SOLUTIONS







Services: customized, value-retaining, cost-effective

BENZ SERVICES
FOR YOUR BENEFIT

Rapid Repair Kits
Promptly solved

- reduce downtime costs due to a machine standstill
- all critical wear and special parts available for a prompt repair
- assembly of your individual Rapid Repair Kit
- offer and order processing
- attractive pricing

Service evaluation and repair
Expertly solved

- quick and professional analysis of damage
- findings and recommended repairs within 5 working days
- you decide based on the recommendation how to proceed
- on request: general overhaul

BENZ TOOLING SERVICE

service@benztooling.com

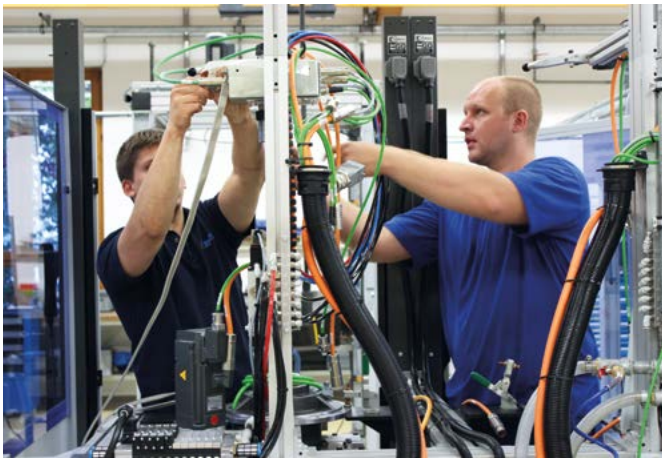

Service installers come to your site anywhere in the world



Competent service employees answer your questions and help with issues

Preventive maintenance
Precautionary solved

- preventively reduce unplanned downtimes
- increase the unit's lifetime
- maintenance of a perfect product condition
- can be done during a shutdown
- on request: general overhaul

Worldwide on-site service
Globally solved

- professinal assembly / product briefing
- troubleshooting
- repair on-site (if possible)
- regular maintenance

BENZ PRODUCT WORLD
TOOLING & MACHINE TOOLING TECHNOLOGY

TOOLING TECHNOLOGY



METAL

TOOLS FOR TURNING CENTERS
LIVE TOOLS / STATIC TOOLS

- Radial heads 90°
- Radial heads ≠ 90°
- Axial heads
- Swivel heads
- Multi-spindle heads
- Broaching units
- Static tools

COMPONENTS. Our comprehensive tool concepts for turning centers and milling centers are ideal for nearly every application. Providing a technological advantage is our goal.
SPECIFIC TO THE CUSTOMER. Our modular approach enables customized configurations.
SYSTEMS. We develop special customer-specific tools for OEM and end customers on request.



METAL

TOOLS FOR MACHINING CENTERS

- Angle heads 90°
- Angle heads ≠ 90°
- Swivel heads
- Multi-spindle heads
- Broaching units
- High-speed spindles
- Rotating tool holders

KNOWLEDGE AND EXPERIENCE. Our knowledge of the metalworking industry and decades of development partnership make us ideal for new tasks anywhere in the world.
COMPONENTS. We deliver a vast array of standard components from stock and develop innovative, customized systems for OEM and end customers.
VARIETY. Whether in machining centers in the automotive, aerospace or wind energy industries, units from BENZ can be used anywhere. Numerous customers choose us as their systems and innovation partner.



WOOD / COMPOSITE AND ALUMINIUM

TOOLS FOR MACHINING CENTERS

- Angle heads 90°
- Swivel heads
- Multi-spindle heads
- Multi-axis heads
- Sanding units
- Floating head units
- Rotating tool holders

FOR ANY APPLICATION. Cost-effectively process and machine wood, composites and aluminium: We provide series production angle heads for drilling, milling, sawing and grinding in addition to other units for special applications.
FROM BASIC TO HIGH-END.
BENZ units are available in a variety of performance classes, making them ideal for everything from light machining to high-performance continuous operation.
SYSTEMS. We have the solution for your special applications: Customized BENZ units for machining centers. Put us to the test!

MACHINE TOOLING TECHNOLOGY

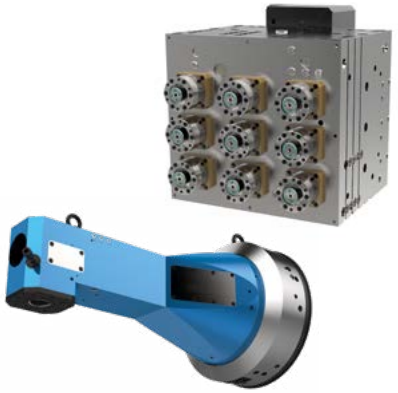

METAL

MULTI-SPINDLE HEADS AND LARGE DRILL HEADS

- Large angle heads
- Large drill heads
- XXL multi-spindle heads

DEVELOPMENT PARTNER. We accompany you from brainstorming to inspection of the final machine, always to your expectations.
Our assortment ranges from compact heads to XXL units.
SYSTEMS. BENZ stands for high-end solutions in the fields of machine tooling technology, specialty solutions, custom assemblies and mechanical modules. We manufacture and configure multiple-
spindle and large-angle heads as well as large drill heads.
COMPONENTS. Attachment units complete our range.

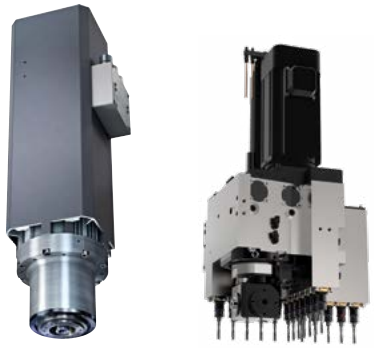

METAL / WOOD / COMPOSITE AND ALUMINIUM

SYSTEM TECHNOLOGY

- Multiple-spindle drill heads
- Motor spindles
- 5-axis technology
- C-axes
- Swivel axes
- Z-axes

COMPONENTS. Our range includes standard products in an assortment of shapes and sizes.
THE PERFECT ADDITION. Our system additions provide you with even more efficiency. Perfect your existing solutions with BENZ products!
SYSTEMS. We develop the technology of tomorrow. Your individual requirements for the efficiency of your machine tools and the suitability of the tools in use provide our benchmark for new, innovative solutions.

SERVICE



METAL / WOOD / COMPOSITE AND ALUMINIUM

SERVICE

- Service evaluation and repair
- Rapid Repair Kit
- Preventive maintenance
- Spare part management
- Worldwide on-site service

DO NOT LOSE A SECOND. Speed is the order of the day when unexpected breakdowns occur. Our service center ensures Immediate assistance around the world. We ensure your machine has as little downtime as possible.
SERVICE QUALITY. We guarantee top service quality reflecting our expertise as a manufacturer.
FORESIGHT. We go one step further: Preventive maintenance, customized Rapid Repair Kit and our spare part management service ensure you have the best setup to face any emergency. We look to the future to keep you at your peak.

PICTOGRAMS AND ABBREVIATIONS OVERVIEW

ANGLE HEADS SPECIFICATION

Change the unit



Automatic
BENZ standard angle heads can generally be automatically changed



Manual
the angle heads can also be manually changed

Machining



Drilling
the angle head is suitable for drilling operations



Milling
the angle head is suitable for milling operations



Tapping
the angle head is suitable for threading operations

Number of output spindles (tool holding fixtures)



1
the angle head has one output spindle



2
the angle head has two output spindles

Axis angle



90°
angle head for machining tasks at 90° angle



0° bis +100°
angle head for machining tasks at flexible angle. Any angle can be set.



0°-120°
angle head for machining tasks in fixed angular position



MQL-internal
the tool is cooled using an internal line directly through the spindle

Coolant supply for cutting edge



External (EC)
the tool is cooled via an external line (coolant nozzle)



Internal (IC)
the tool is cooled using an internal line directly through the spindle



Combination
the cooling of the tool is combined – internally and externally



No coolant supply
the angle head does not have a coolant supply as standard

Types of cooling (coolants) and Lubrications



Water cooling
the tool cutting edge is cooled with water



MQL
the tool cutting edge is cooled with minimal quantity lubrication (oil/air)



Air cooling
the tool cutting edge is cooled with air

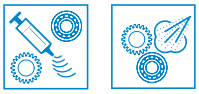

Lubrication
grease | MQL

GENERAL SPECIFICATION

Information



Important information



Video

Advantages



Time savings



Cost savings



Easy handling



Safe handling

Sectors



Automotive



Two-wheeler



Machine construction



Aerospace



Medical



Plastics technology



Wind power

Services



Services

ABBREVIATIONS

α	Angle
CAD	Computer-aided design
CNC	Computerized Numerical Control
Ø	Diameter
°	Degrees
kg	Kilograms
L (1-5)	Length
$p_{max.}$	Pressure
min^{-1}	Revolutions per minute
mm	Millimeters
Nm	Newton meters
$n_{max.}$	Revolutions per minute
$p_{max.}$	Pressure (bar)
e.g.	for example

Explanation of the weight composition of the angle heads

The weights specified on the product pages always refer to the configuration with an HSK-taper, a standard torque arm and the BENZ Solidfix® output spindle.

The deviations of alternative tool holders and/or alternative machine connections are specified in the tables and have to be added to the original weight.

The weight of a quick-change adapter and that of a tool cutter are not considered.

ARE YOU ALREADY FAMILIAR WITH OUR EXPERTISE?

+ teams of experts with industry experience
+ internationally networked through world-wide locations and partners
+ the highest quality for all products and services
+ precise, customer-specific solutions
+ constant development of our industry expertise

YOUR DIRECT LINE
YOUR CONTACTS WORLDWIDE

Usage note – general

The contents of this catalog are not legally binding and are intended solely for informational purposes. Any final agreement will be in the form of a written order confirmation from BENZ GmbH Werkzeugsysteme, which occurs only subject to the respective current General Terms and Conditions of Sale and Delivery of BENZ GmbH Werkzeugsysteme. These can be found online at www.benztooling.com

All of the products listed in this catalog are designed for their intended use, e.g. machines for precision machining. The recognized technical regulations for safety and professional work must be followed for use and installation.

Furthermore, the respective laws, guidelines from TÜV, guidelines from the respective trade association and VDE stipulations shall apply.

The technical data listed in this catalog must be observed by the user. The conditions of use may not fall below or exceed the specified data. If information is missing, it cannot be assumed that there are no upper or lower limits or no limitations for specific use cases. Consultation is required in these cases.

Disposal is not included in the price, which would have to be taken into account accordingly in the event of return to or disposal by BENZ GmbH Werkzeugsysteme.

TECHNICAL DATA AND FIGURES

The technical data and figures have been compiled with great care and to the best of our knowledge. We cannot guarantee that the information is up to date, correct or complete.

The specifications and information – such as figures, drawings, descriptions, dimensions, weights, materials, technical and other performance data and the described products and services – contained in general product descriptions, BENZ GmbH Werkzeugsysteme catalogs, brochures and price lists in any form are subject to change and may be modified or updated at any time without prior notification. They are binding only to the extent expressly specified in a contract or order confirmation. Slight deviations from such descriptive product information shall be considered approved and shall not affect fulfillment of agreements insofar as they are reasonable for the customer.

LIABILITY

Products from BENZ GmbH Werkzeugsysteme are subject to the German Product Liability Act. This catalog does not contain any guarantees, assurances of quality or procurement agreements for the products it depicts, neither expressly nor implied, including for the availability of products. Advertising statements relating to quality features, properties or applications for the products are not legally binding.

To the extent permitted by law, BENZ GmbH Werkzeugsysteme is exempt from any liability for direct or indirect damage, subsequent damage and requests of any kind or on any legal basis resulting from the use of information contained in this catalog.

TRADEMARK, COPYRIGHT AND REPRODUCTION

The depiction of commercial property rights in this catalog – such as brands, logos, registered trademarks or patents – does not include the granting of licenses or use rights. Their use is not permitted without the expressed written agreement of BENZ GmbH Werkzeugsysteme. All contents of this catalog are the intellectual property of BENZ GmbH Werkzeugsysteme. For the purposes of copyright, any unlawful use of intellectual property, including excerpts, is prohibited. Reprinting, copying or translating (including in the form of excerpts) are permitted only with the prior written consent of BENZ GmbH Werkzeugsysteme.

CERTIFICATION

BENZ GmbH Werkzeugsysteme has a quality management system certified in accordance with ISO 9001:2008. BENZ GmbH Werkzeugsysteme has an environmental management system certified in accordance with ISO 14001:2004.

This catalog was issued with great care and all specifications were checked for correctness. However, no liability is assumed for incorrect or incomplete information. BENZ GmbH Werkzeugsysteme reseves the right to make technical changes and improvements through continual further development of the products and services. All texts, images, representations and drawings in this catalog are the property of BENZ GmbH Werkzeugsysteme and are protected by copyright. Any kind of reproduction, editing, modification, translation, filming or processing and saving in electronic systems is prohibited without the consent of BENZ GmbH Werkzeugsysteme.

The contents and data are valid at the time of printing.
Edition 12/2024

C-100000112653-EN-1224

BENZ GmbH Werkzeugsysteme
Kinzigpark 3
77723 Gengenbach
Germany

+49 7803 504 300-0
info@benztooling.com
www.benztooling.com

BENZ TOOLING